Integration and Onsite System Aspects of Industrial Post-Combustion CCS

V. Andersson T. Berntsson

Department of Energy and Environment
Chalmers University of Technology, Sweden

Process flowsheet

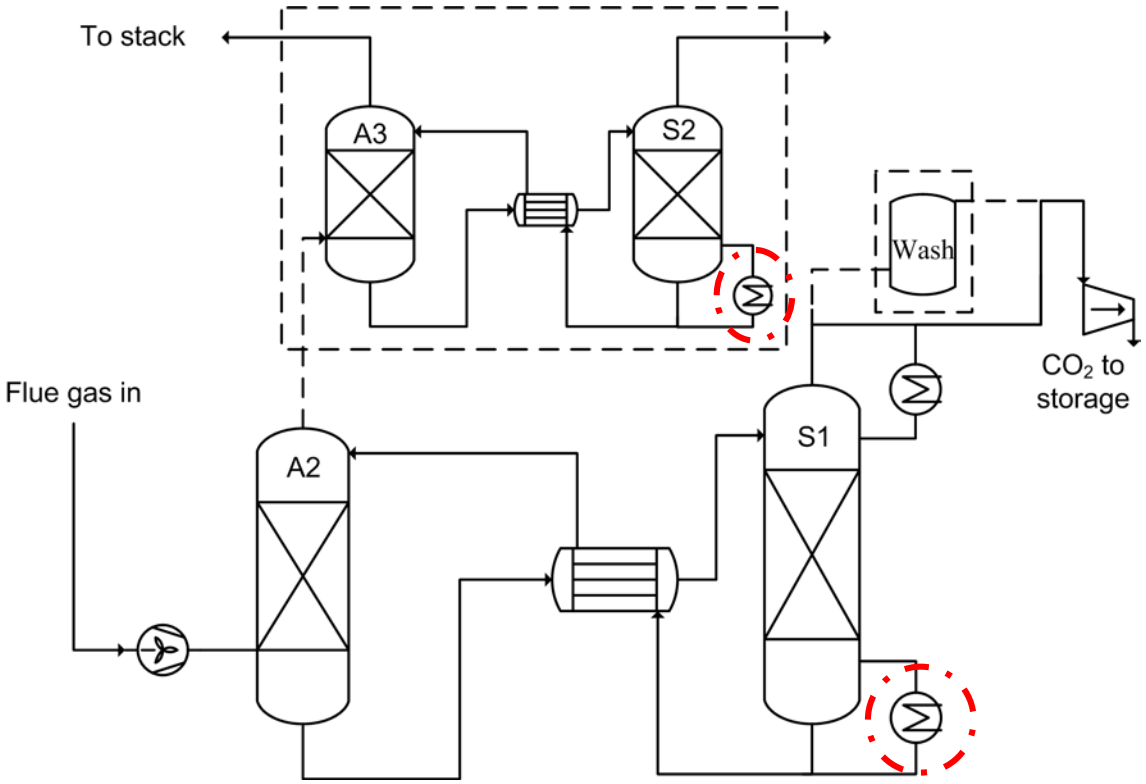

System Aspects on Desorber Heating

Heating in the desorber the most expensive part of the whole CCS plant, including distribution and storage

Main aims of this presentation

- To discuss opportunities for integration with the industrial energy excess heat system
- To compare excess heat usage with other measures for desorber heating

Examples from two industry types:

Oil refinery

Pulp and paper

Main Questions

- Can industrial excess heat be used for reducing this cost?
- What importance does the excess heat temperature level have?
- Can industrial excess heat compete with other measures for desorber heating?
- What levels of avoidance costs can be achieved?

Oil refinery

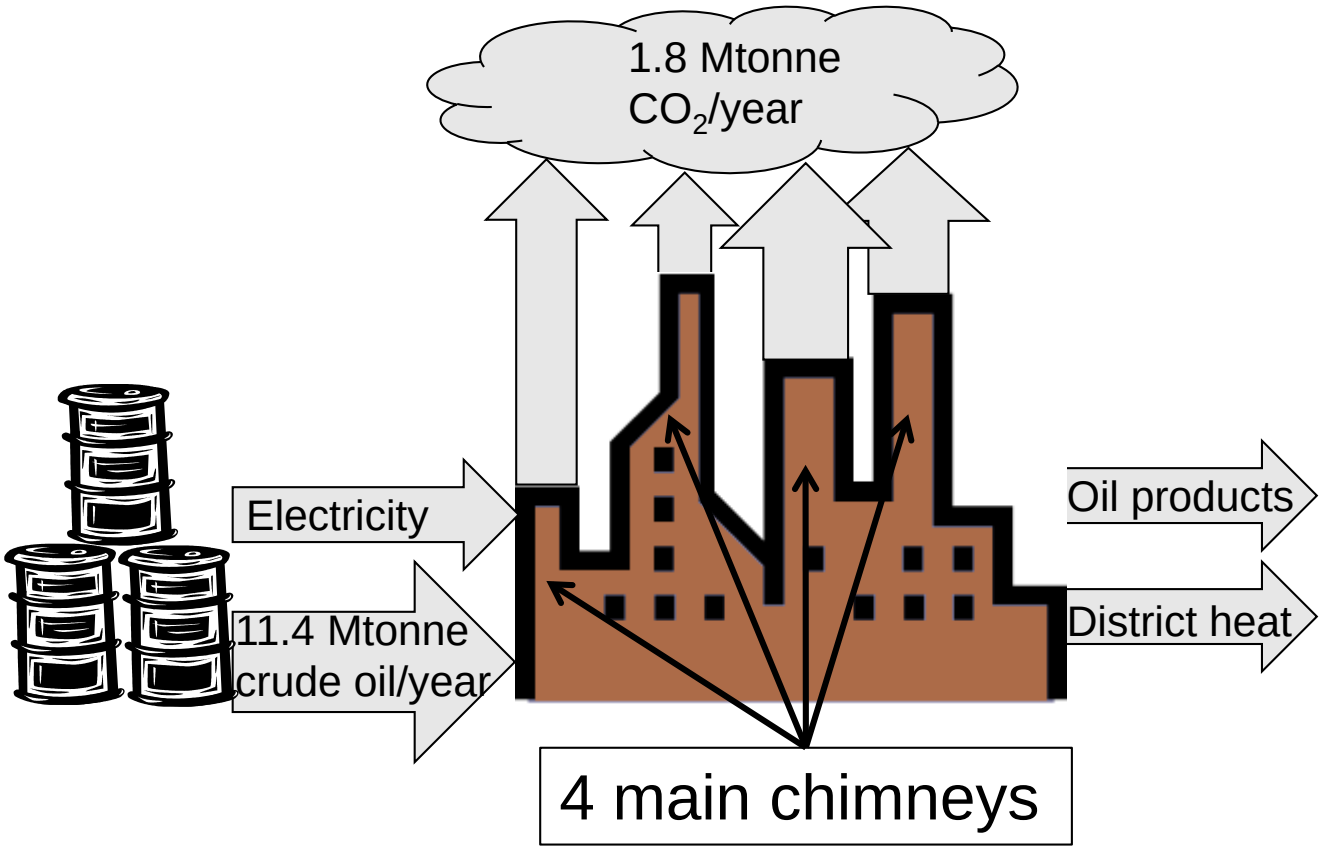

Excess heat recovery

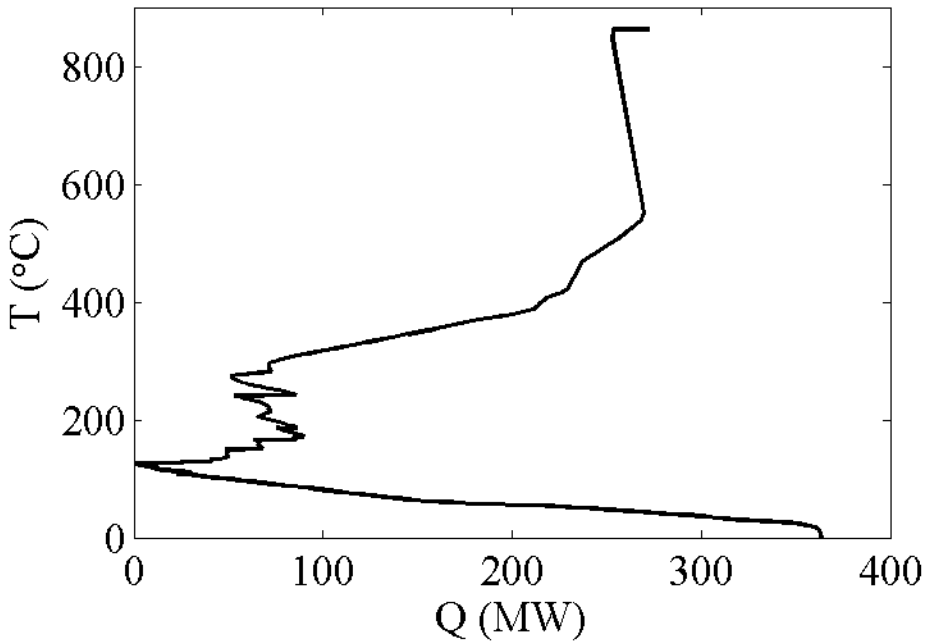

Optimal heat exchanger network

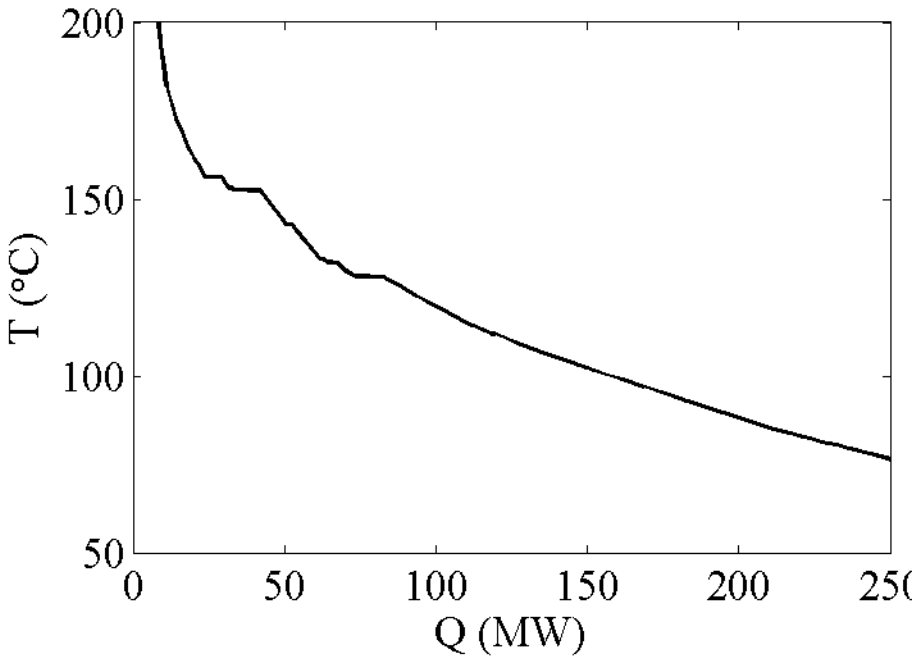

Actual cooling taking place at refinery

Excess heat recovery

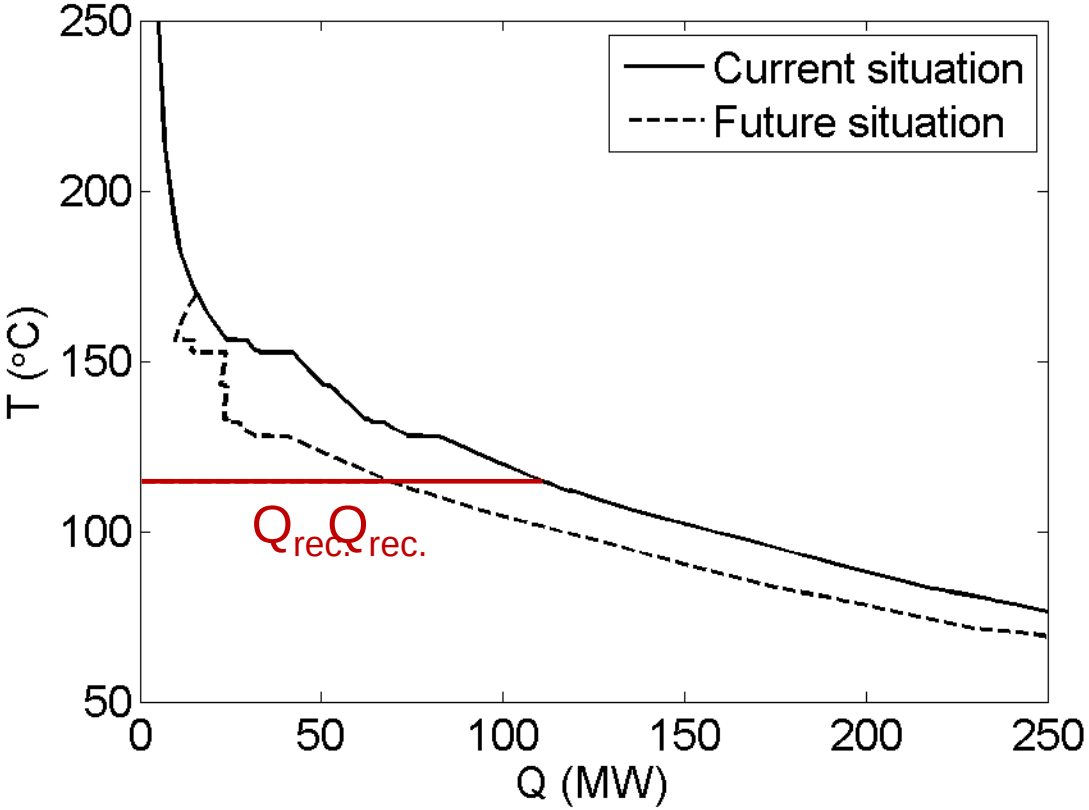

- Energy efficiency to be implemented before CCS
- 20 % of identified possible measures implemented
- Energy efficency to take place at 130 – 170 °C
- Decrease in heat and CO_2 emissions

Excess heat recovery

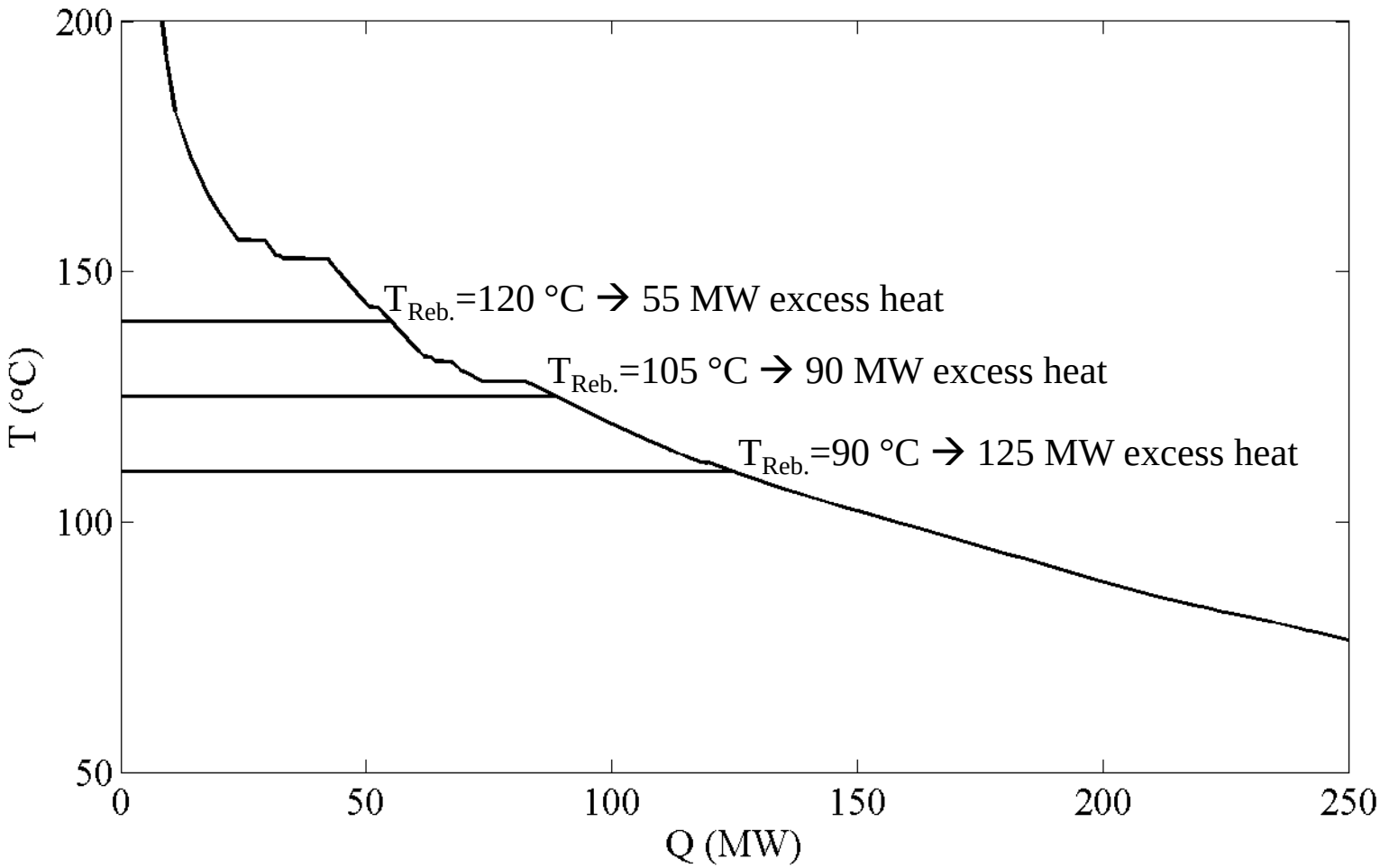

Heat Integration of MEA Process

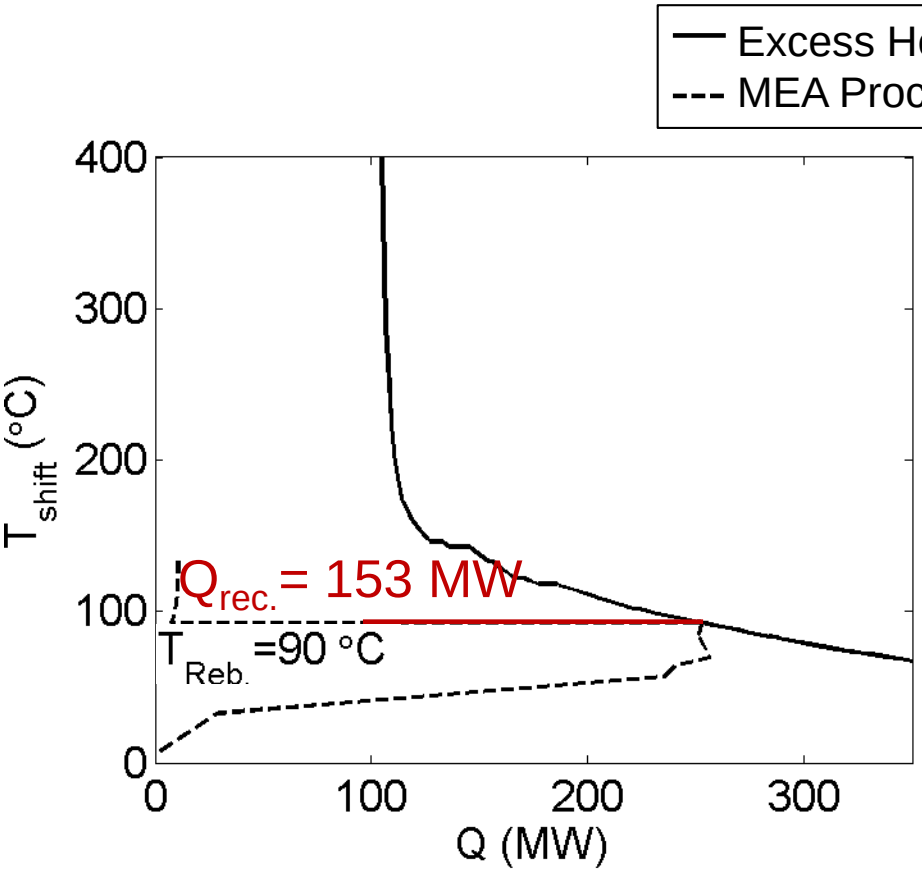

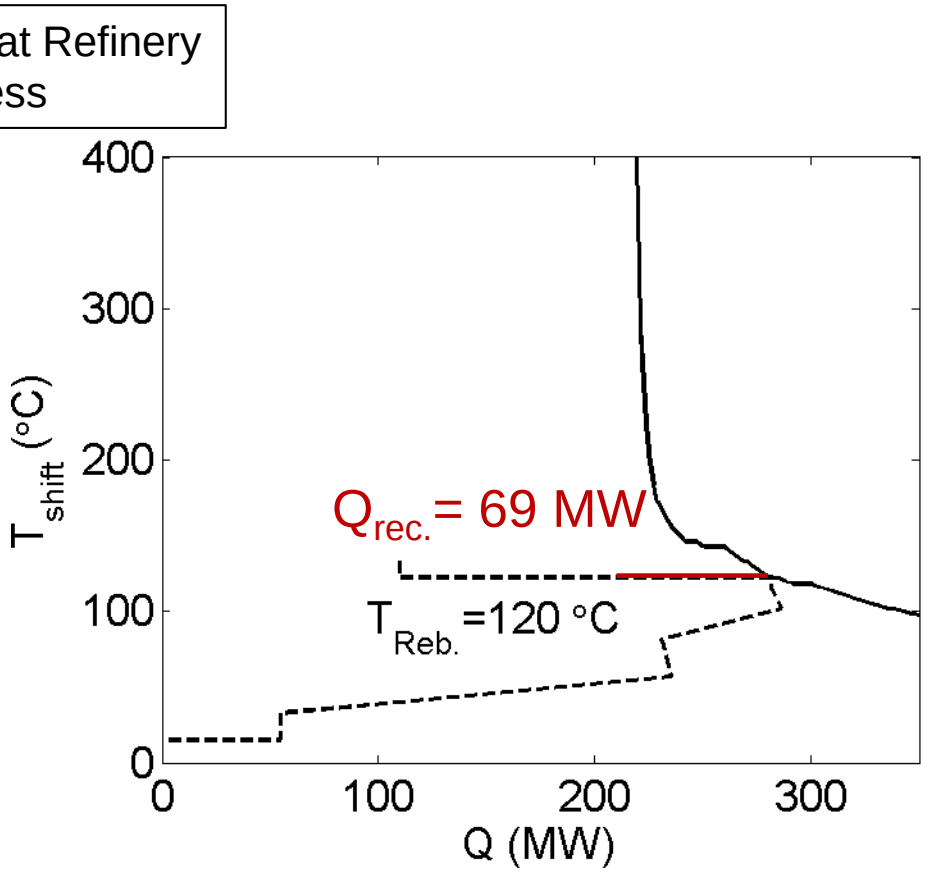

Heat pump

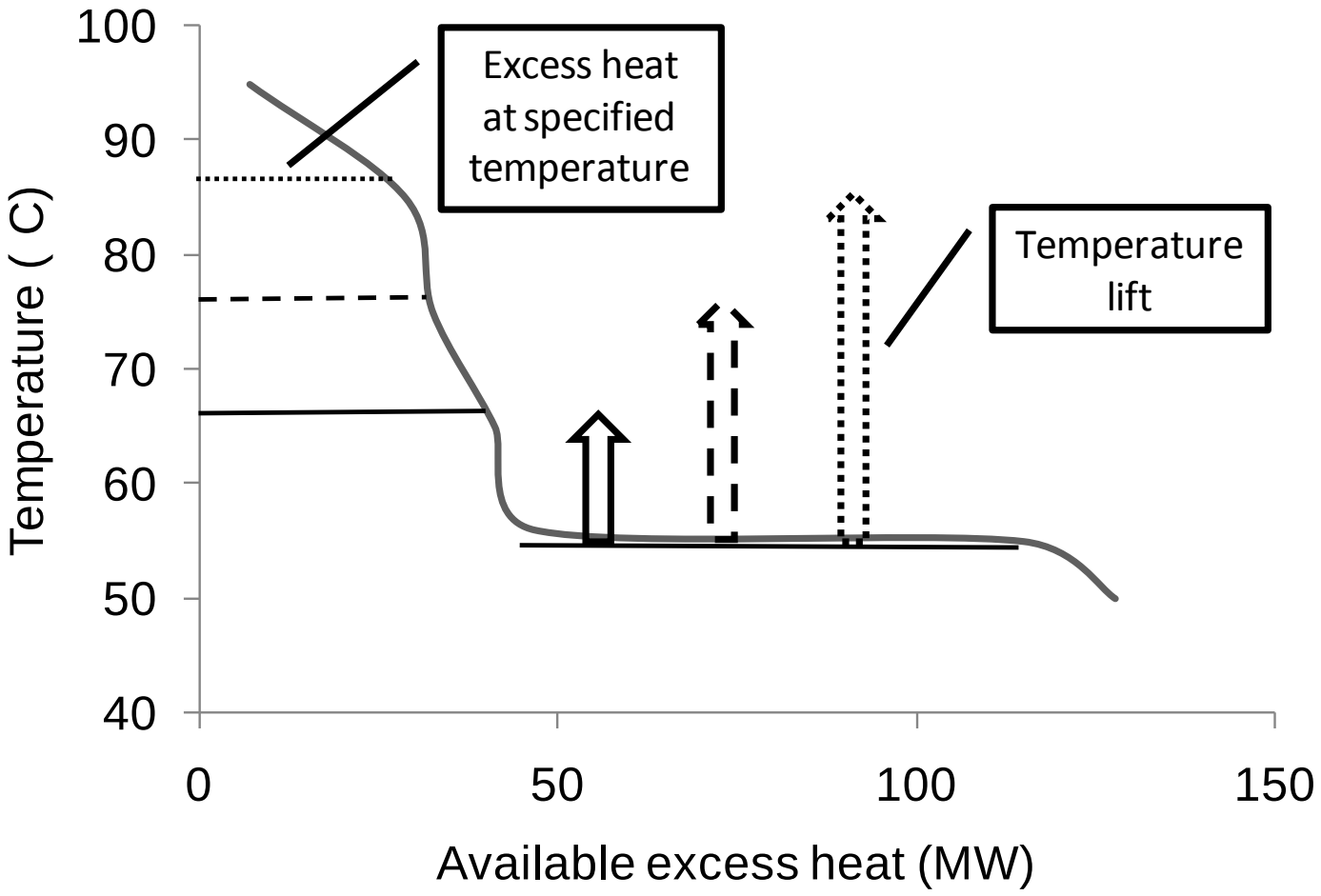
Excess heat at specified temperature
Temperature lift
Temperature (C)
100
90
80
70
60
50
40
0
50
100
150
Available excess heat (MW)

Three main consequences of the temperature level

A lower temperature means:

- More excess heat available
- Higher need for desorber heat
- Lower temperature lift for a heat pump

Specific heat demand and temperature correlation

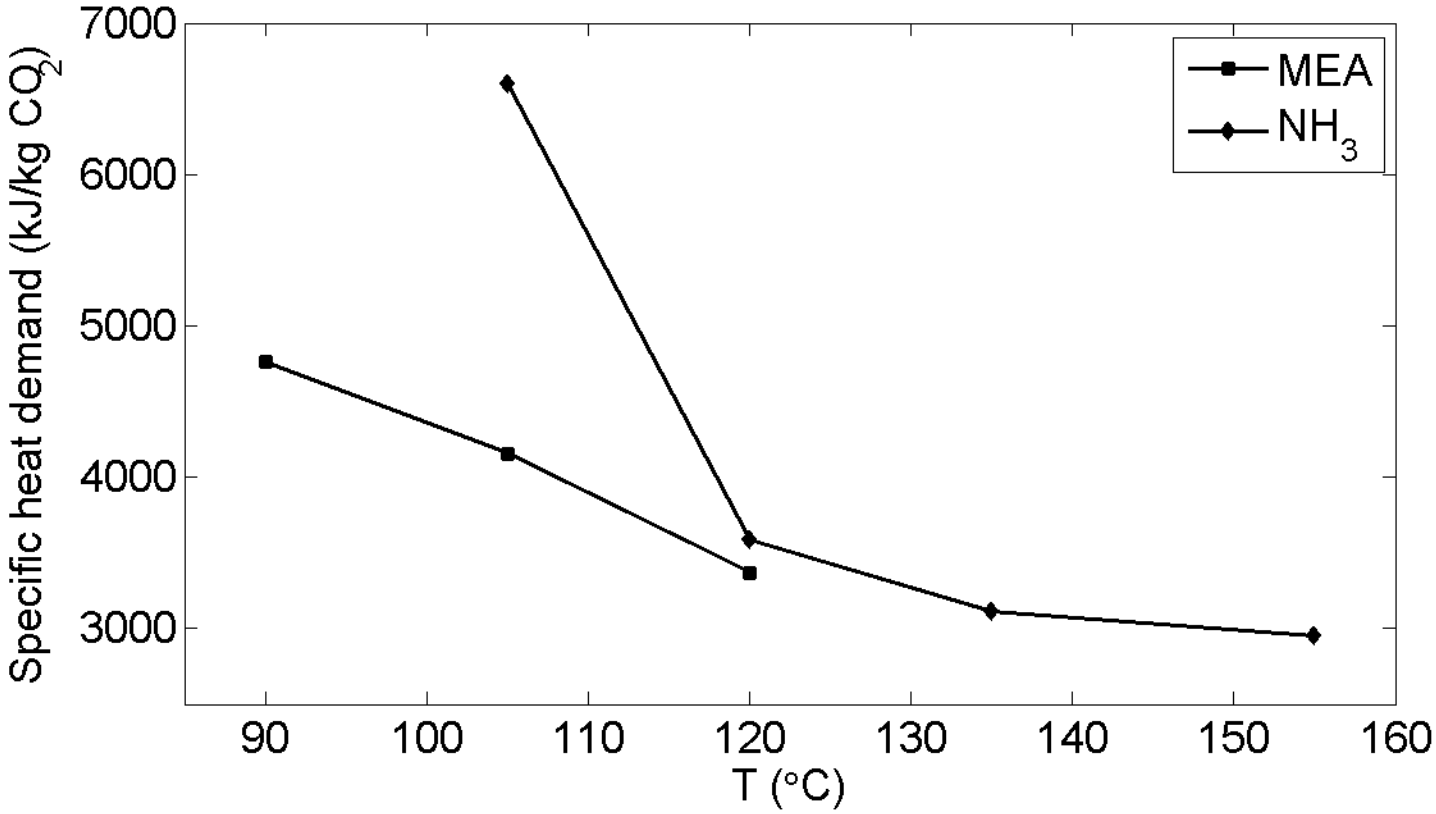

Heat demands at 85% capture

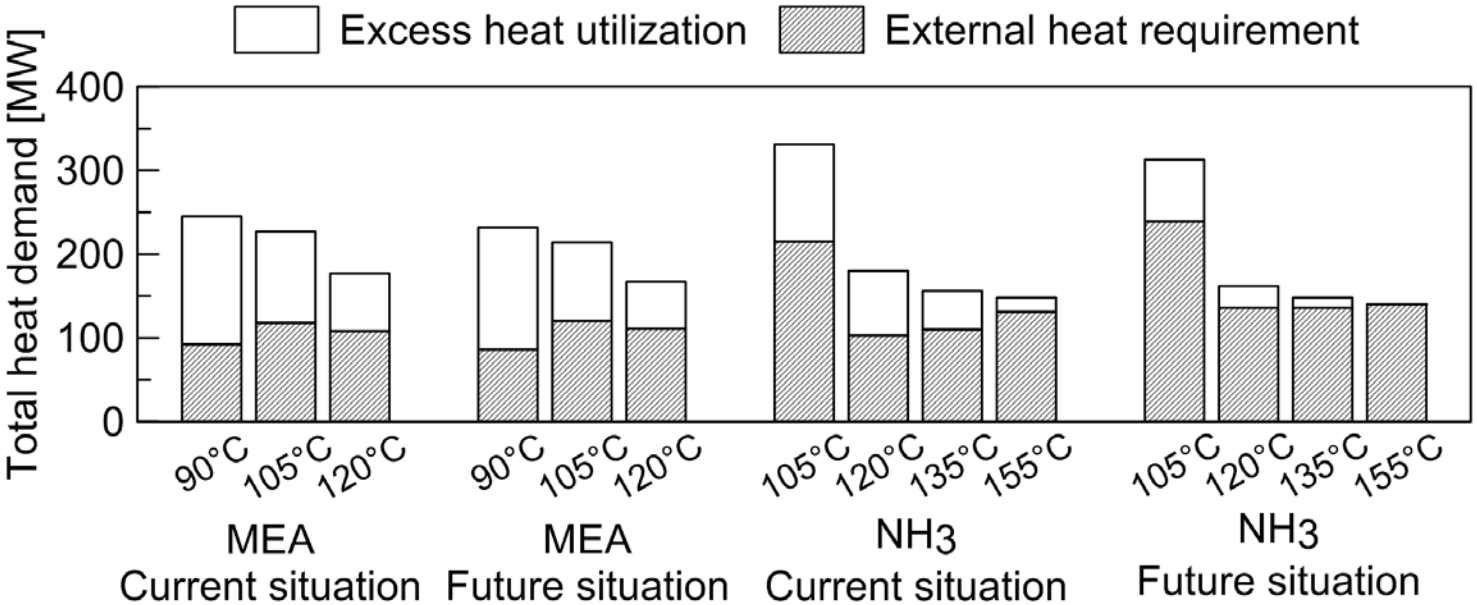

Current situation:

- 1.8 Mt_{CO2}/y emitted
- 1.5 Mt_{CO2}/y captured

Future situation:

- 1.7 Mt_{CO2}/y emitted
- 1.4 Mt_{CO2}/y captured

Heat collecting system

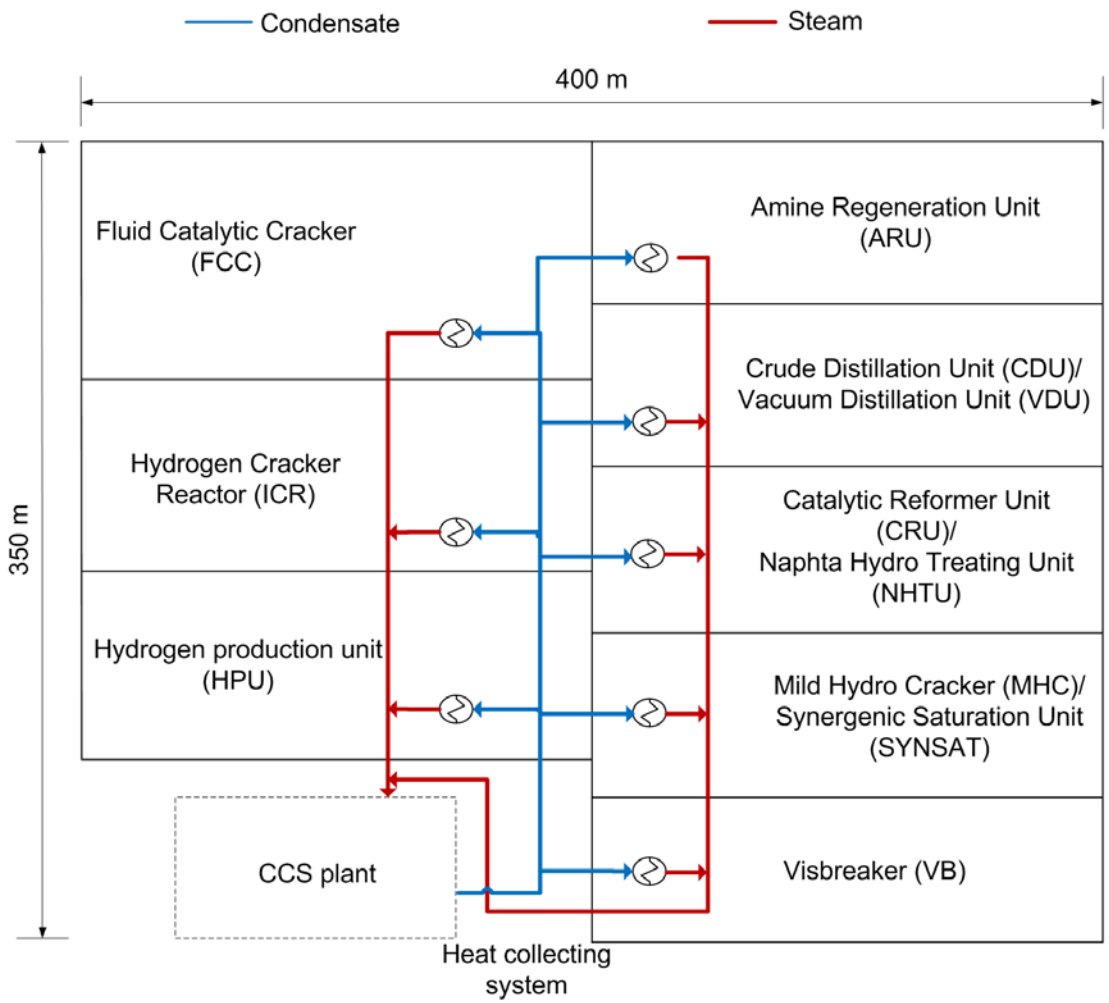

Stream type	ΔT contribution (K)
Gas	7.5
Liquid	5
Evap./Cond.	2.5

Future developments

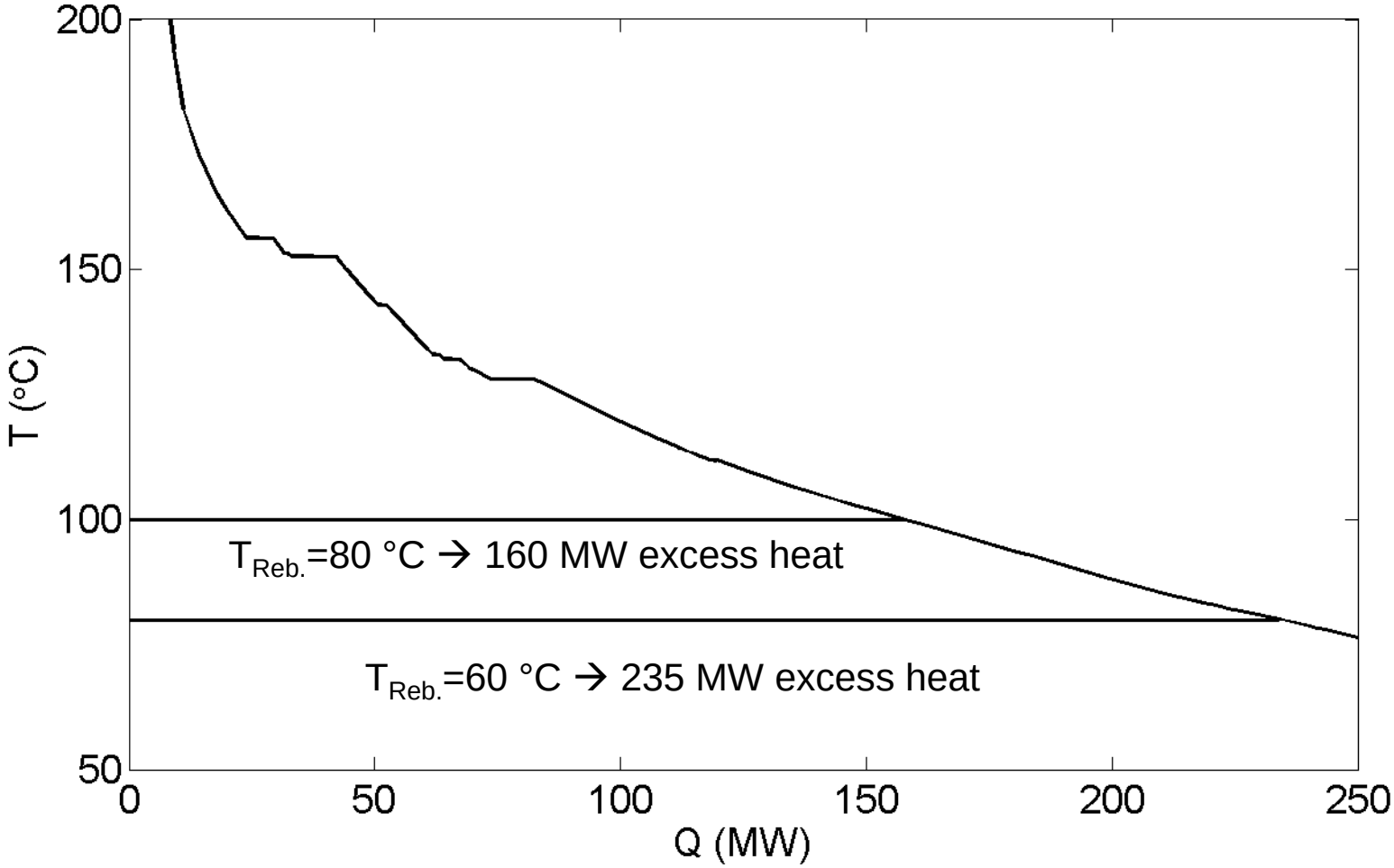

Pulp and paper mill

Flue gases

1 065 600 tonne CO_2 /year

Black liquor 340 MW
Biofuel 80 MW

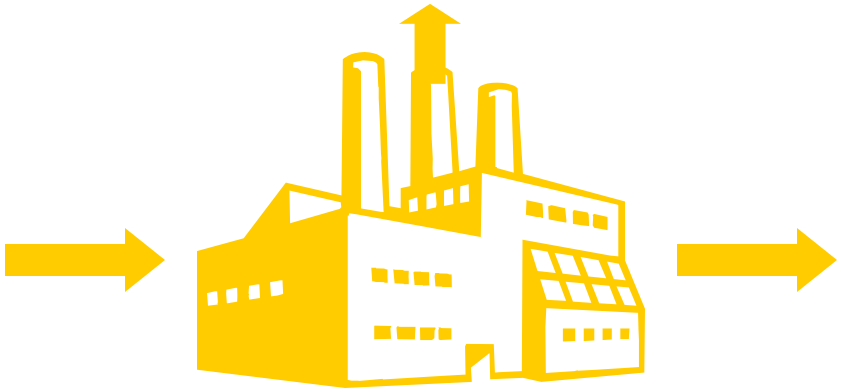

Steam
Electricity

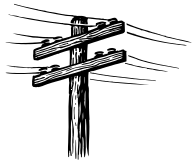

Swedish total emissions of fossil CO_2:	55 Mtonne / year
Swedish total emissions of biomass CO_2:	34 Mtonne / year
Swedish total emissions of CO_2:	89 Mtonne / year
CO_2 emissions from pulp and paper mills:	14 Mtonne / year (16 %)

Excess heat

Integrated pulp and paper mill

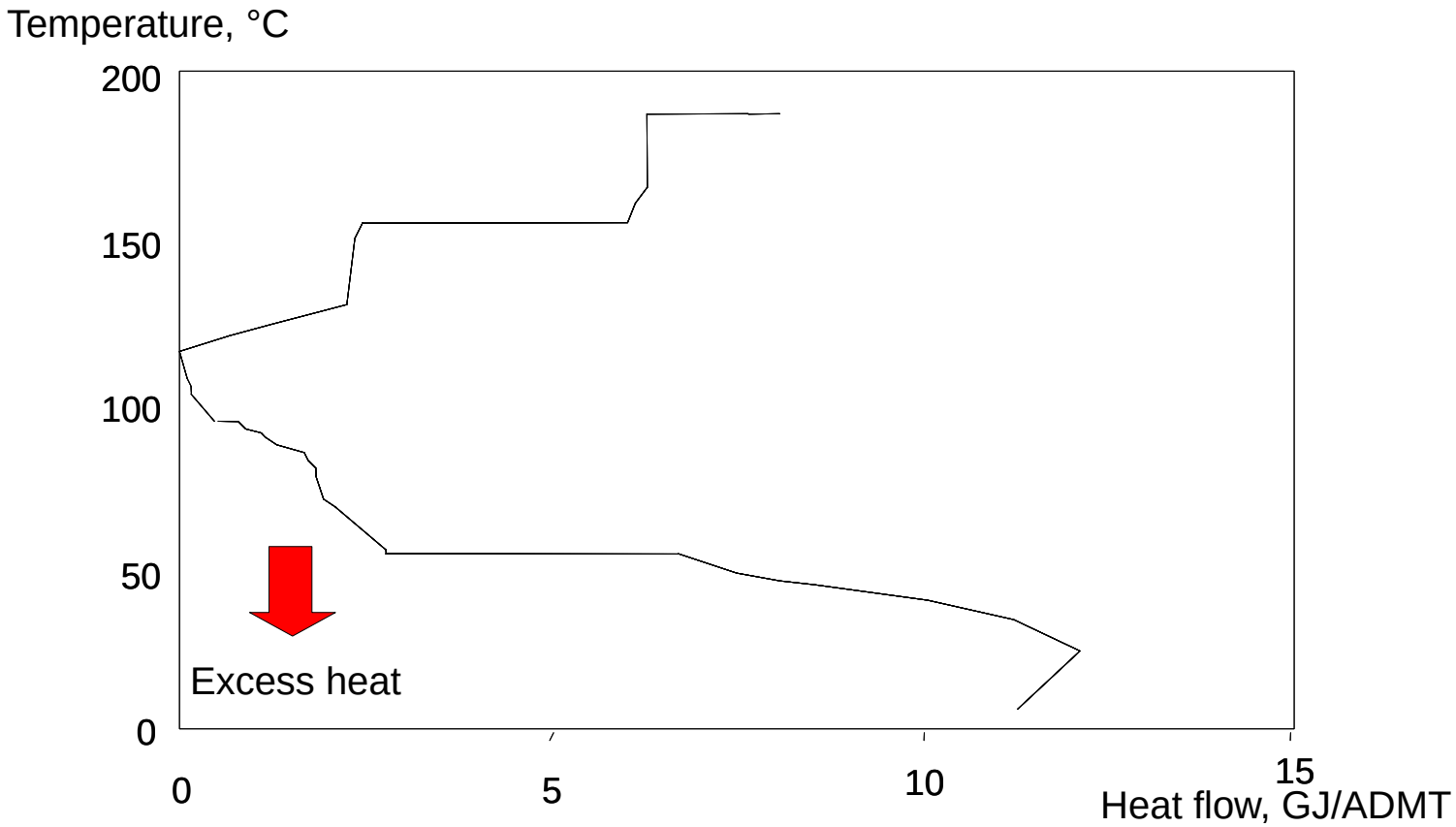

Possible Heat Sources

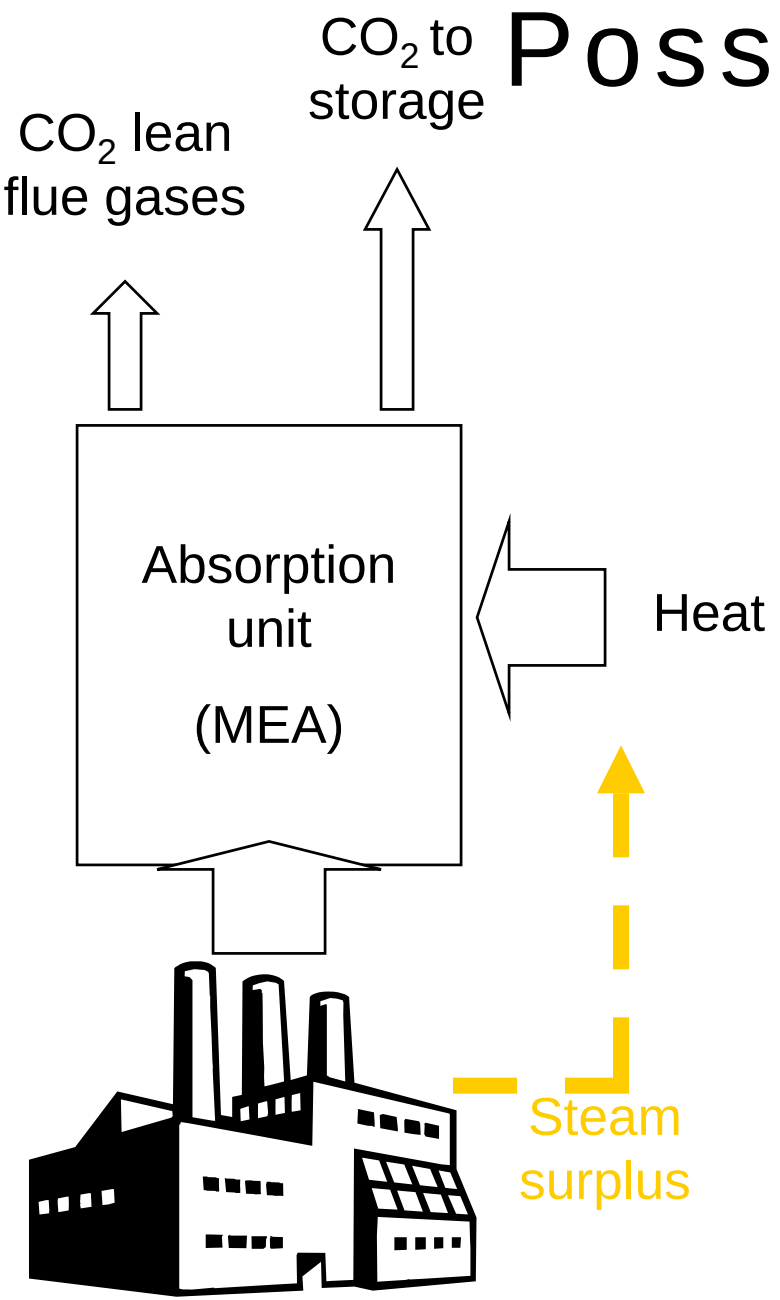

- Biofuel boiler

(+ Thermal process integration)

- NGCC – CHP

(+ Thermal process integration)

- Heat pump

Biofuel boiler

Biofuel boiler

- Fuel: Biofuel
- Fuel demand: 209 MW
- Change in electricity surplus: + 14 MW

Boiler + Process integration

- Fuel: Biofuel
- Fuel demand: 142 MW
- Change in electricity surplus: + 4 MW

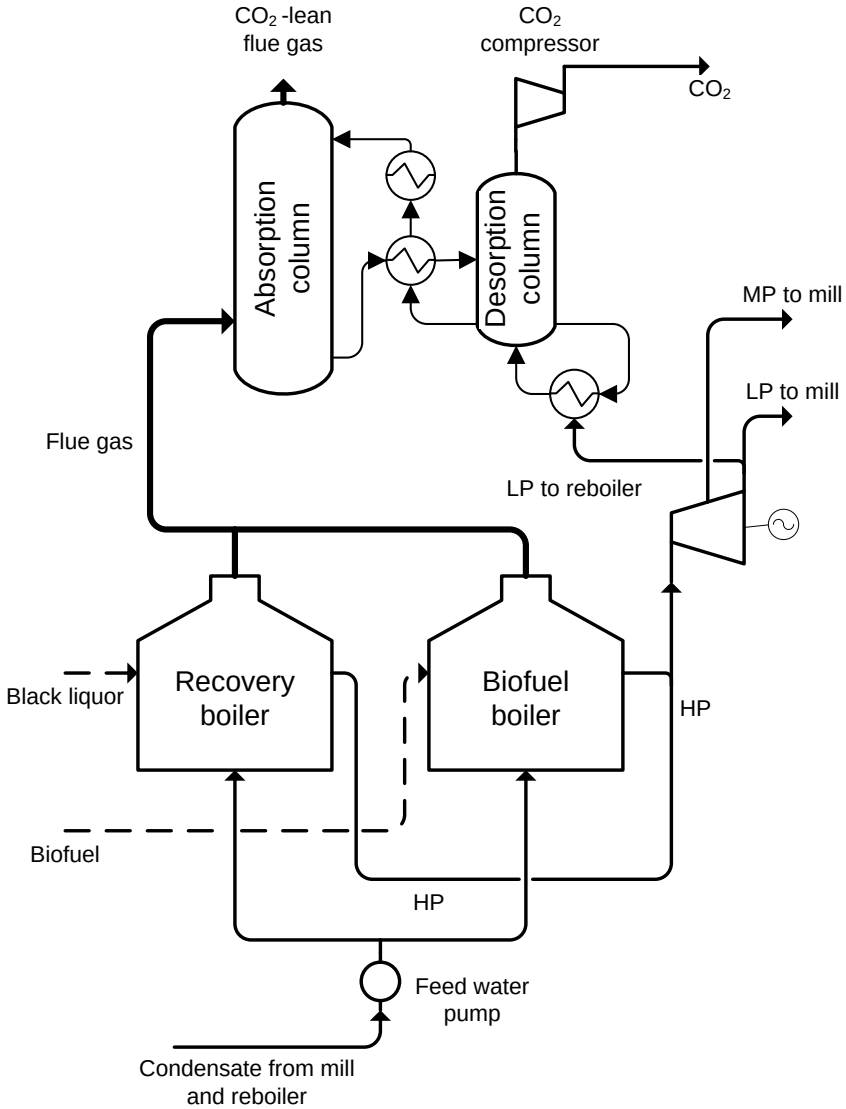

NGCC - CHP

NGCC

- Fuel: Natural gas
- Fuel demand: 260 MW
  (- 80 MW biofuel)
- Change in electricity surplus: + 99 MW

NGCC + Process integration

- Fuel: Natural gas
- Fuel demand: 123 MW
  (- 80 MW biofuel)
- Change in electricity surplus: + 47 MW

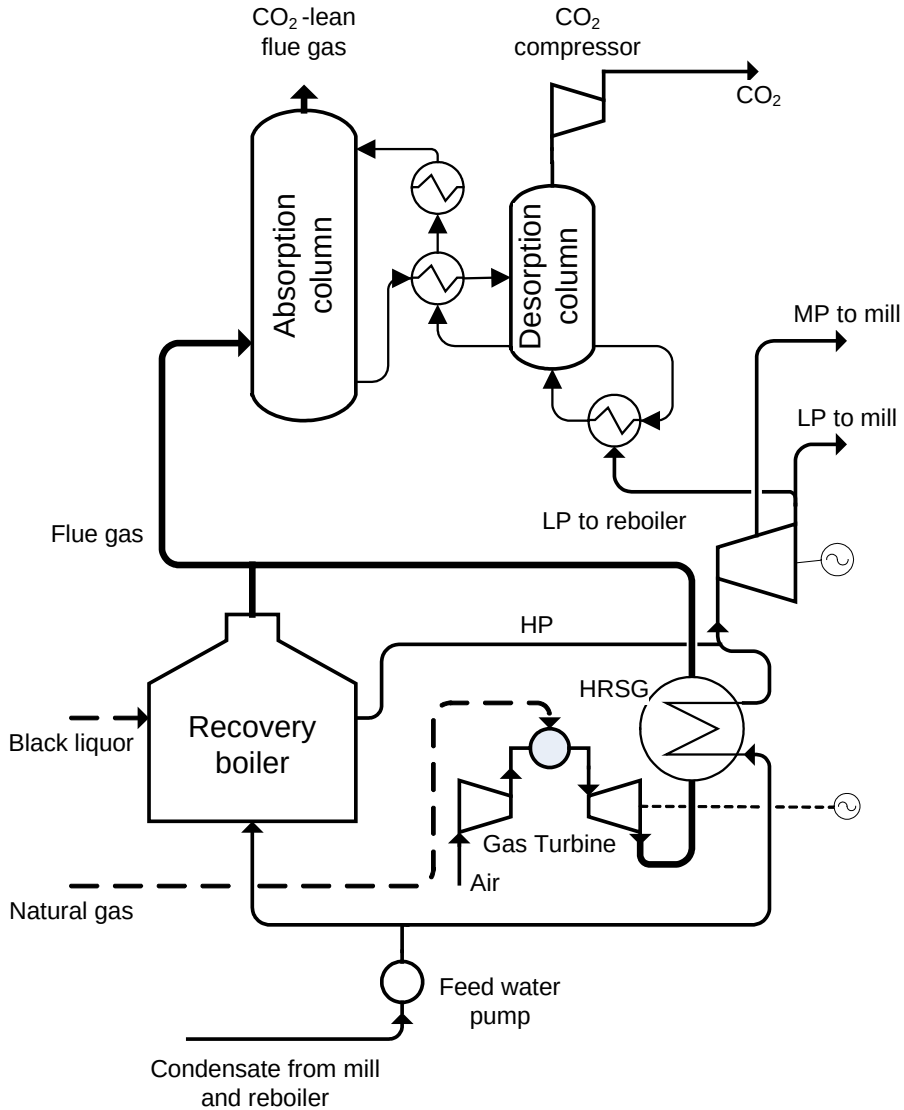

Heat Pump

Heat pump

- Electrically driven closed cycle
- Three stage turbo compressor
- COP: 4.4
- Electricity consumption: 38 MW

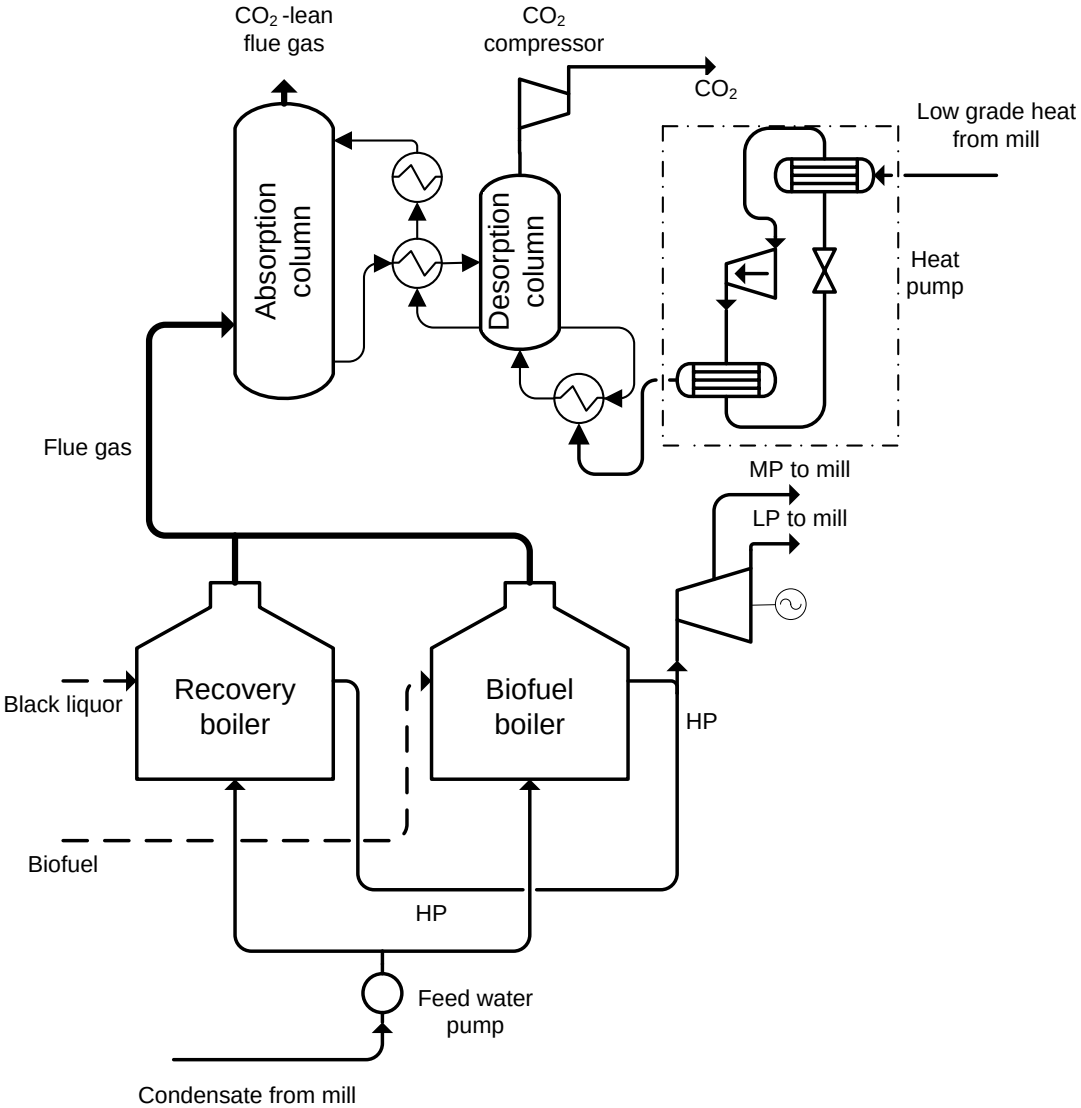

Process integration - the exempel of CO_2 capture

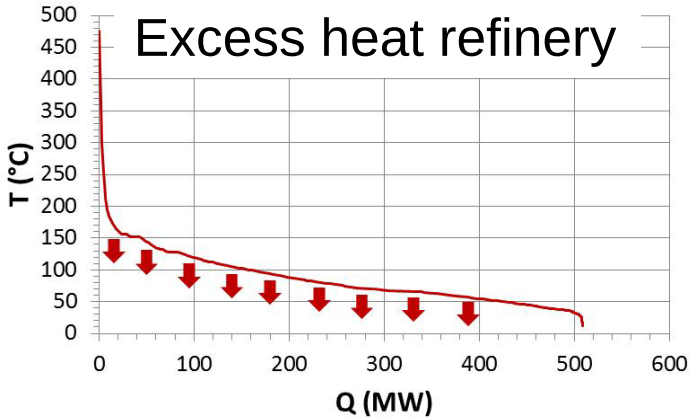

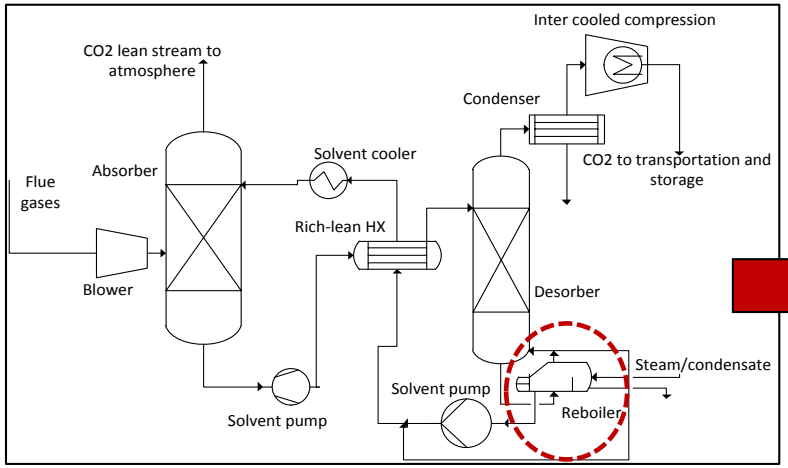

Post-combustion CO_2 capture plant

Heat integration of CO_2 capture plant

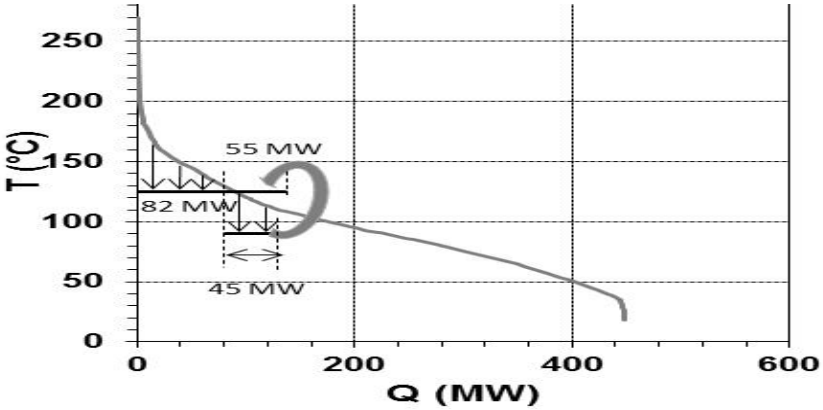

What is the **most-cost effective** and **robust heat supply alternative** for a **post-combustion CO_2 capture** plant?

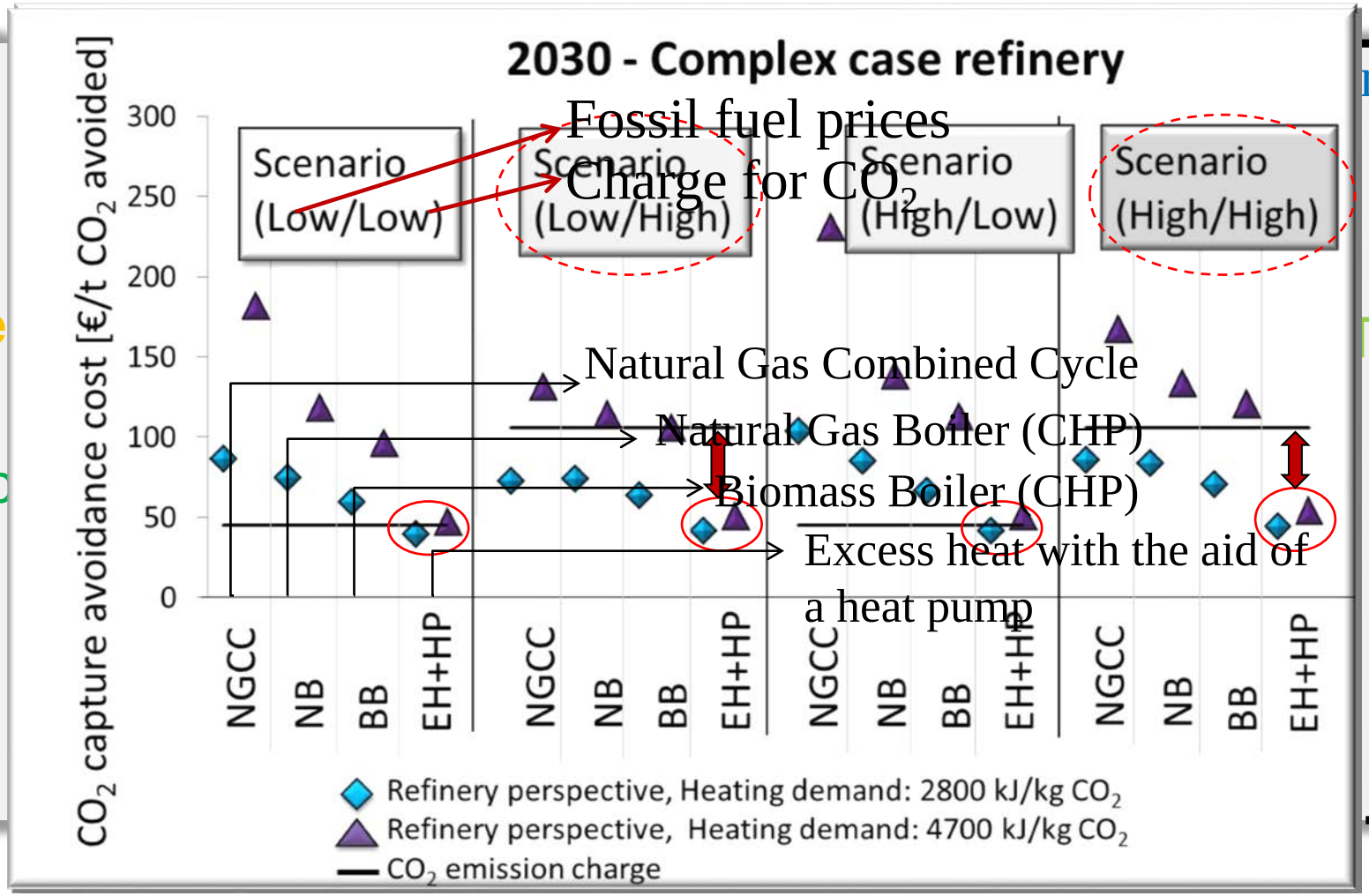

Conclusions

- Excess heat amounts at usable temperature levels are in many cases available in process industries
- At least parts of the desorber heat can be covered by direct use of excess heat
- Reasonable costs for collection of excess heat possible to achieve, according to case studies
- Use of excess heat can reduce the cost for desorber heating compared with other measures

- New absorption fluids, working at lower temperatures (60-80 C), could increase the usable excess heat amounts considerably