2nd Oxyfuel Combustion Conference

Study Results of Combustion Characteristics and Behaviors of the Corrosive Substances in Oxy-fuel Combustion Process

Takahiro Gotou[a]*, Toshihiko Yamada[a], Takashi Kiga[a], Nobuhiro Misawa[b] and Keiichirou Hashimoto[c]

[a]*IHI Corporation, Toyosu IHI Building, 1-1, Toyosu 3-chome, Koto-ku, Tokyo 135-8710, Japan*
[b]*Electric Power Development Co., Ltd., 15-1, Ginza 6-chome, Chuo-ku, Tokyo 108-8165 Japan*
[c]*Japan Coal Energy Center, 9F Meiji Yasuda Seimei Mita Building, 14-10,Mita 3-chome, Minato-ku, Tokyo 108-0073 Japan*

Keywords: Coal, Combustion, CO_2, Oxyfuel, Corrosion, Hg, Power plant

1. Introduction

From a global viewpoint, thermal power plants are still releasing CO_2 in large quantity at present in the world, which indicates the necessity for a power generation system with Carbon dioxide Capture and Storage (CCS) in more effective and economical manner. Among all the fossil fuels used at thermal power plants, coal produces the greatest amount of CO_2 per unit calorific value as compared with the other fossil fuels. Thus, coal fired power plants seem to be one of the significant sources of CO_2 emission and are required to reduce CO_2 emission into the atmosphere effectively and economically. The oxy-fuel combustion technology is expected to be one of the options for CO_2 capture from coal fired power plant. Our feasible study results on this area suggested that the oxy-fuel coal combustion process is one candidate of the cost-effective CO_2 capture processes.

In the process of capturing CO_2 by the oxy-fuel combustion, O_2 is separated from the combustion air by air separation unit and is used for burning the pulverized coal in the furnace. And it is theoretically possible to concentrate the CO_2 concentration in the flue gas up to 90% or higher at the boiler outlet. The flue gas, which mostly consists of CO_2, is recirculated for the sake of transporting the pulverized coal to the burners through the pulverizers and of controlling the flame temperature. In our previous studies, the oxy-fuel process can help the NO_x emission to reduce drastically, compared with the conventional air combustion process.

On the basis of our previous study results for oxyfuel combustion, we are performing the demonstration project in Australia called "Callide Oxyfuel Project". The project is now under way for applying oxy-fuel combustion to an existing plant by way of demonstration and is implemented at the power generation system in Callide-A power plant No.4 unit with a capacity of 30MWe in Australia. This project aims at capturing CO_2 from an actual power plant for CO_2 storage. The demonstration operation will commence at the middle of 2011.

This paper introduces some test results regarding combustion characteristics and corrosive components in oxy-fuel combustion are introduced using the pilot-scale combustion test facilities

* Corresponding author. Tel.: +81-3-6024-7506; fax: +81-3-6024-8791.
E-mail address: takahiro_gotou@ihi.co.jp.

2. Recent study results on pilot plant test in oxyfuel combustion

Behaviors of combustion characteristics and corrosion components under oxy-fuel combustion were confirmed using the pilot-scale combustion test facilities in Aioi works of IHI. The test furnace is a vertical and cylindrical furnace with a capacity of 1.2 MWt, an inside diameter of 1.3 m, and a length of 7.5 m. In the oxy-fuel combustion, the flue gas taken out after the bag filter is supplied to the burner by the GRF and is also used as gases for transporting pulverized coal as well as for combustion. The combustion gas as the secondary flow is mixed with O_2 for adjusting the O_2 concentration at the inlet of the furnace.

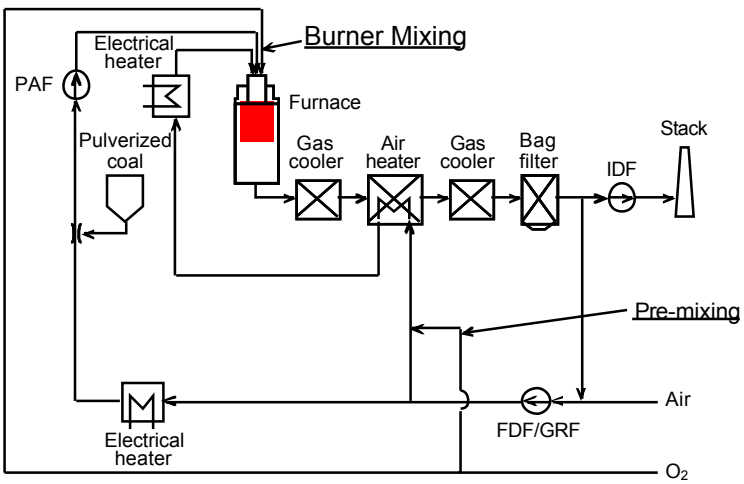

Fig.1 Process flow diagram of pilot-scale combustion test facilities

2.1. Test Results on combustion characteristics

One of the key issues to attain the stable operation is the O_2 supplying method. There are three kinds of O_2 supplying methods in the oxy-fuel combustion. The first one is the pre-mixing of O_2 with recirculation flue gas before combustion, the next one is the burner mixing in the burner flame that means the direct injection through the lances and the last one is the combination of both pre-mixing and burner mixing. From the results of previous combustion test at the pre-mixing condition using our test facilities, it is suggested that the burner direct O_2 injection was necessary in order to attain the stable flame at the burner low load and transitional variation of the boiler in the oxy-fuel condition. Moreover, there is the advantage of simplified combustion control in burner direct O_2 injection.

Therefore, we confirmed the difference of the combustion characteristics by O_2 supplying method as mentioned above.

The burner using pilot plant test was installed the O_2 injection lance. Primary flow with pulverized coal is supplied from pulverized coal nozzle at the center of the burner. Secondary flow from wind-box is supplied to the burner through the register vanes around the PC nozzle. A part of or all of O_2 was injected through O_2 lances which were installed around the PC nozzle and at the inner side of the register vanes.

The test result showed that NO_x concentration tend to be increased and the flame controllability tend to be decreased when the burner direct O_2 injection rate increased.

2.2. Test Results on the behavior of Hg

The oxyfuel flue gas is introduced into CO_2 compression and purification unit (CPU) that makes almost pure liquefied CO_2 under the condition of low temperature and high pressure, so it is normally used aluminum based heat exchanger in the CO_2 processing unit. On the other hand, the flue gas contains a small amount of Hg, which causes corrosion to aluminum based metal by contact between Hg and aluminum. The removal of Hg from the processing flue gas is important to establish a CO_2 capture technology.

Therefore, the test was performed for the purpose of confirming the behaviors of Hg in the oxyfuel combustion system. Test results will be reflected in the optimization of processing flue gas treatment.

2.3. Corrosion components for corrosion in the boiler tube

In the oxyfuel, flue gas is much higher CO_2 concentration than air combustion. So, it is possible to carbonize and degrade in boiler tube. Moreover, recycle flue gas has higher corrosion components, that is mainly sulfur oxide, in case of no FGD in the flue gas treatment process as compared with air combustion. There is an issue of high temperature corrosion in oxidize atmosphere and sulfidation corrosion in reduction atmosphere in case of staging combustion. Knowledge of corrosion in oxyfuel is insufficient and attaining knowledge of corrosion is necessary for choice of suitable boiler tube material and countermeasure against corrosion.

Therefore, the sampling and analysis of deposited ash and fly ash were performed for the purpose of confirming the ash components in oxyfuel and air combustion. Test results will be reflected in determination of synthetic ash component using for material corrosion test.

3. Conclusion

These results obtained in this study will be put into practical use at the commercialization stage of oxy-fuel combustion system.

Oxy-fuel combustion technology has been attracting and increased attention worldwide because it has a potentiality for providing a breakthrough solution that helps reduce CO2 emissions. In relation to this technology, many researchers in the world study and develop towards the realization of this technology which is one candidate of the CO2 capture from the coal fired power plant.

We would like to have much knowledge and information through the studies including above and the demonstration operation at Callide Oxyfuel Project, and contribute to reduce CO2 from the coal fired power plant with oxy-fuel technology.

4. Acknowledgement

These studies were greatly supported by Coal division of METI (Ministry of Economy, Trade and Industry), NEDO (New Energy and Industrial Technology Development Organization) as well as by Australian organizations such as CS Energy, ACA (Australian Coal Association), University of Newcastle and many others in Australia and Japan. The authors would like to express gratitude to them for their help and support.