# Pressurised Oxygen Supply for $CO_2$ Capture Applications

Paul Higginbotham and Vince White

Air Products PLC, Hersham Place, Molesey Road, Walton-on-Thames, Surrey, KT12 4RZ, UK

**September , 2013**

# Purpose of this presentation

- To identify some $CO_2$ capture processes that need high pressure oxygen
- To explain the elements of the power consumption of an Air Separation Unit (ASU)
- To describe the differences between pumped liquid oxygen (internal compression) and gaseous oxygen compression plants
- To explain why most modern Air Separation Units (ASUs) use the pumped liquid oxygen process
- To dispel the myth that pumping liquid oxygen (LOX) is much more efficient than compressing gaseous oxygen (GOX)

# Some $CO_2$ capture applications that need pressurised oxygen

- Oxyfuel combustion power generation (coal or natural gas)
  - 10000 tonnes/day for 500MW
  - 1.3 to 100+ bar
  - 95-98+% purity
- IGCC power (or syngas) generation
  - 5000 tonnes/day for 500MW
  - 40 to 100+ bar
  - 95-99.5% purity
- Oxy-blast furnace
  - 3500 tonnes/day for 4 million tonnes/annum hot metal
  - 3 to 8 bar
  - 90-97% purity

# Elements of ASU power

- Overall power can be expressed as sum of three conceptual processes
  - Theoretical power depends only on feed and product conditions (T,P,F,x)
  - Actual process used affects efficiency

  1) Separation of air to oxygen and nitrogen at atmospheric pressure
  - e.g. 130-250 kWhr/tonne $O_2$ depending on purity, process, capital cost

  2) Product compression from atmospheric to required pressure (see graph)
  - e.g. 10 kWh/te at 1.4 bar, 70 kWh/te at 10 bar, 140 kWh/te at 100 bar

  3) Product liquefaction - cool and condense any liquid products
  - e.g. 320 to 400 kWhr/tonne $O_2$
- Efficiency depends on process selection, power/capital evaluation, operating conditions compared to design point
- Powers can be quoted at different points – shaft power, electric power at motor terminals, at incomer, process users only etc.

# Oxygen Specific Compression Power

- Typical values at ISO conditions, based on total flow of oxygen stream

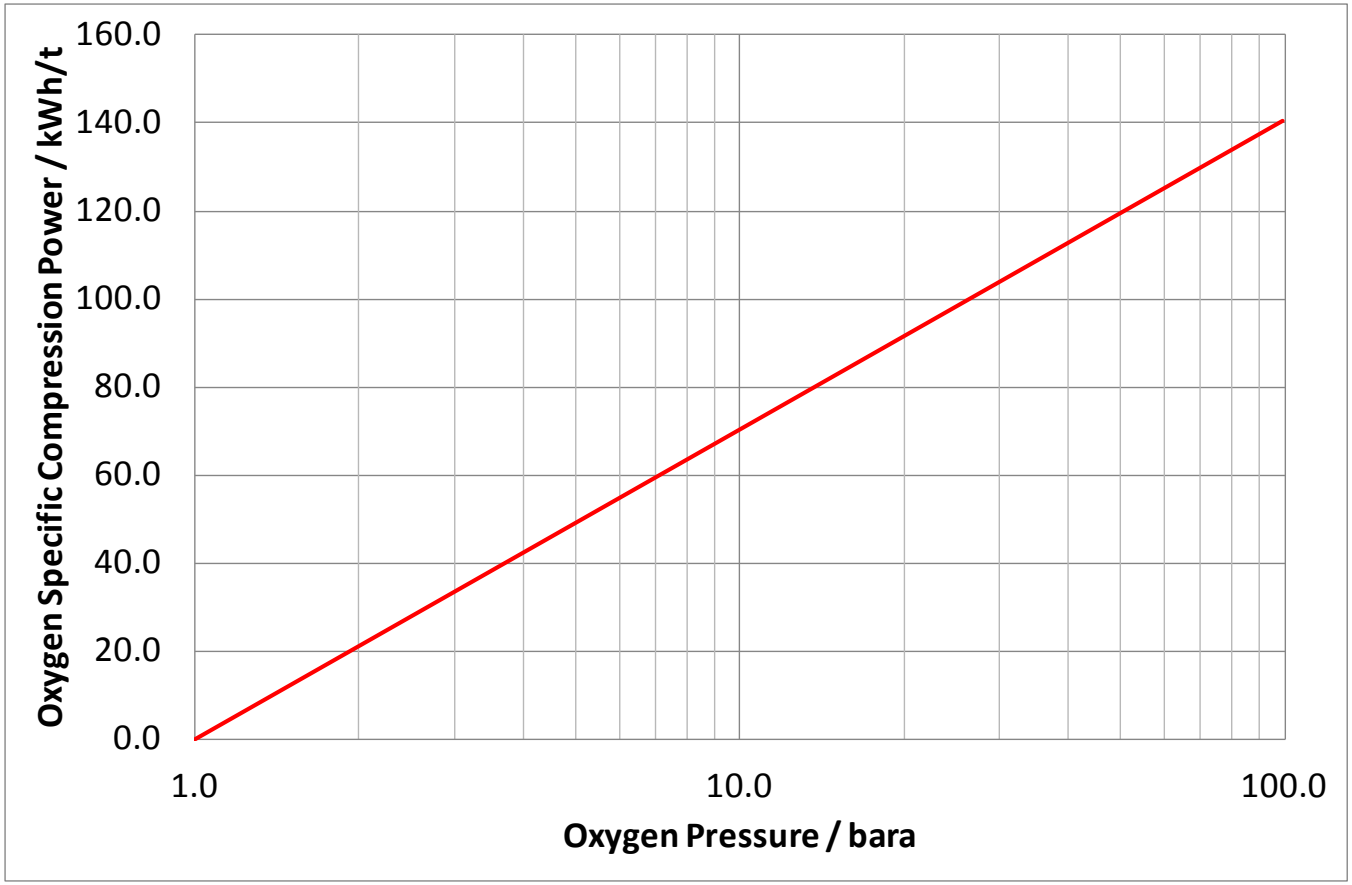

# Comparison of processes for pressurised gaseous oxygen

- Basis: typical double column ASU with air expander to low pressure (LP) column
  - Same compression processes can be used with other distillation systems
    - e.g. for three column cycles
- We will:
  - Compare features of each process
  - Look at safety of each process
  - Compare efficiency of processes over a range of pressures
  - Consider effect of oxygen purity

# “Traditional” ASU for LP or HP $O_2$ – GOX from LP Column, optional compression

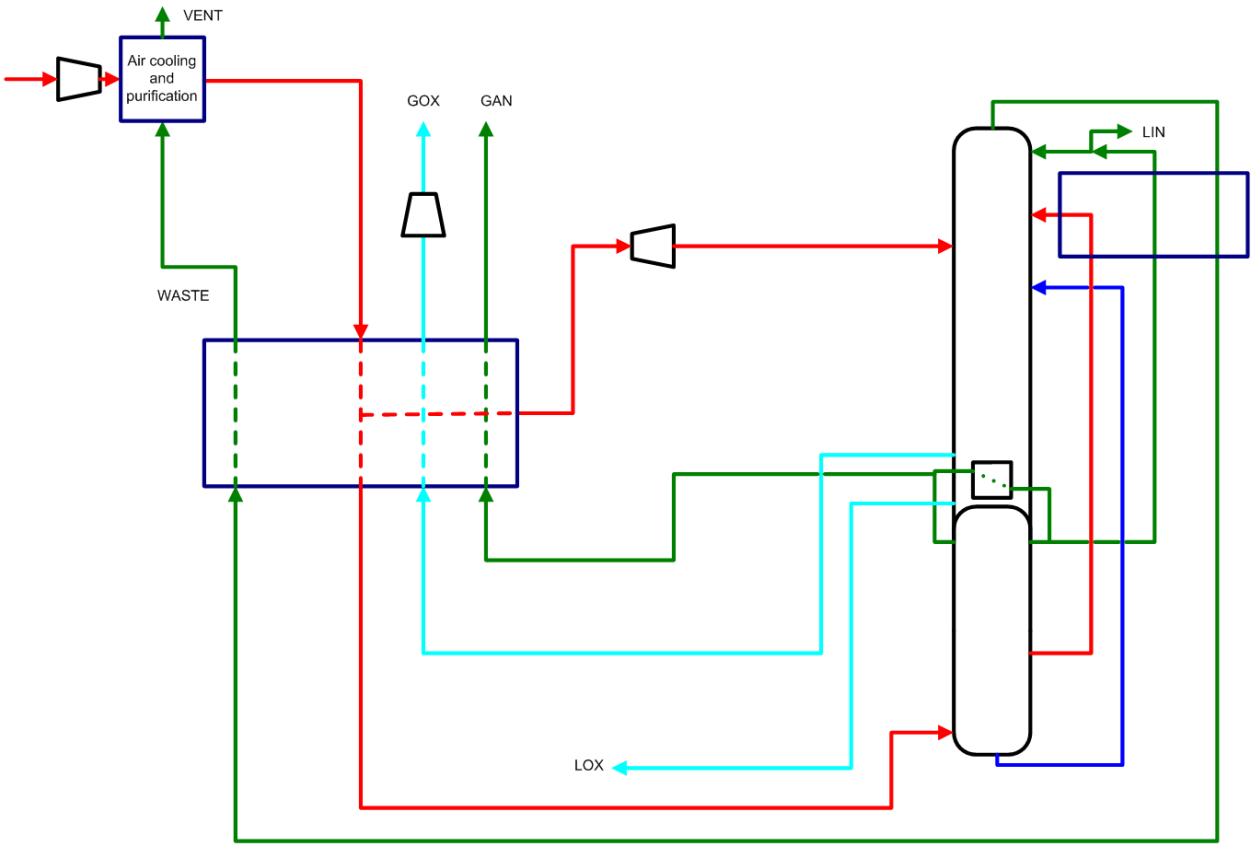

# Features of LP column GOX compression process

- Main air compressor only (no booster air compressor)
- All air enters column system as vapour
- GOX product from LP column
  - Condensing nitrogen in reboiler-condenser boils LOX in column
- Refrigeration provided by expander to LP column
- If pressurised GOX is needed, add compressor - atmospheric pressure suction means large suction volume

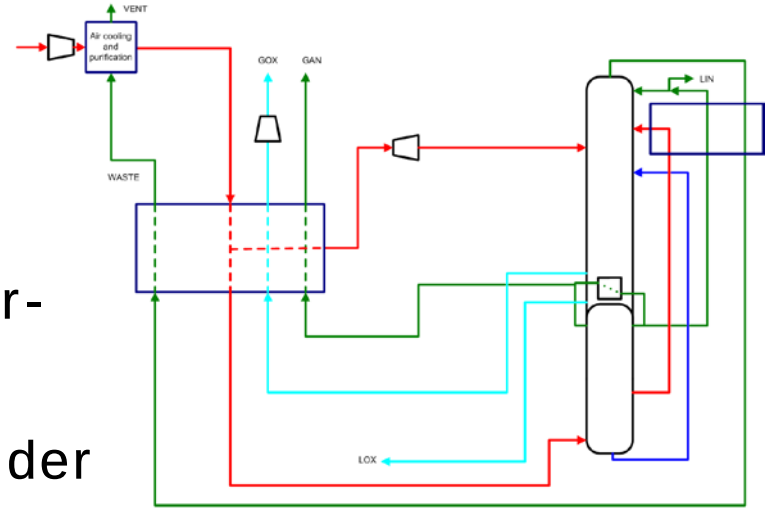

# “Modern” ASU for low pressure $O_2$ LOXBOIL process

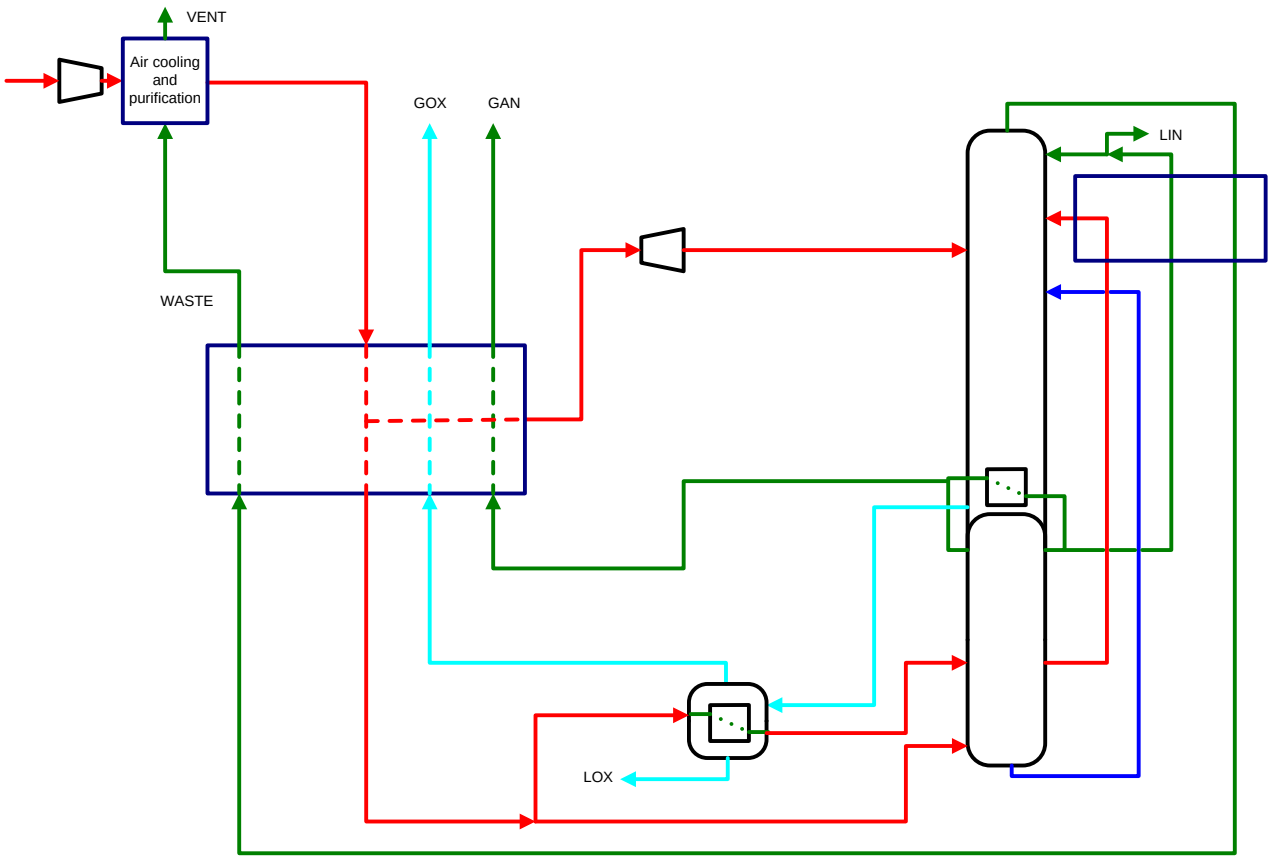

# Features of LOXBOIL process

- Main air compressor (MAC) only (no booster air compressor)
- LOX pressurised by static head
- LOX boiled in separate reboiler by condensing MAC air
- Air from LOX boiler enters columns as liquid (heat balance)
- Refrigeration provided by expander to LP column

- Compared to GOX from LP column
  - GOX pressure can be higher (air condenses hotter than $N_2$)
  - Column system is more efficient (intermediate liquid air reflux) (typically saves ~ 1-3% of separation power)
  - Smaller HP column and main reboiler, additional LOX boiler

# Separation efficiency – McCabe-Thiele diagrams for GOX vs. LOX

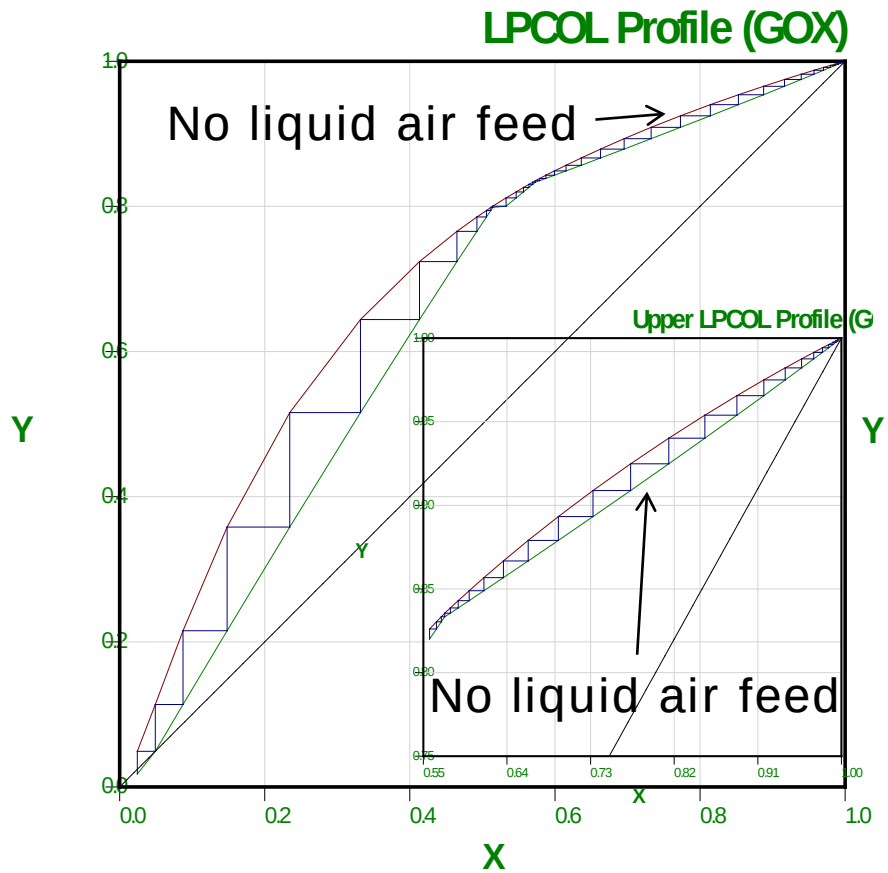


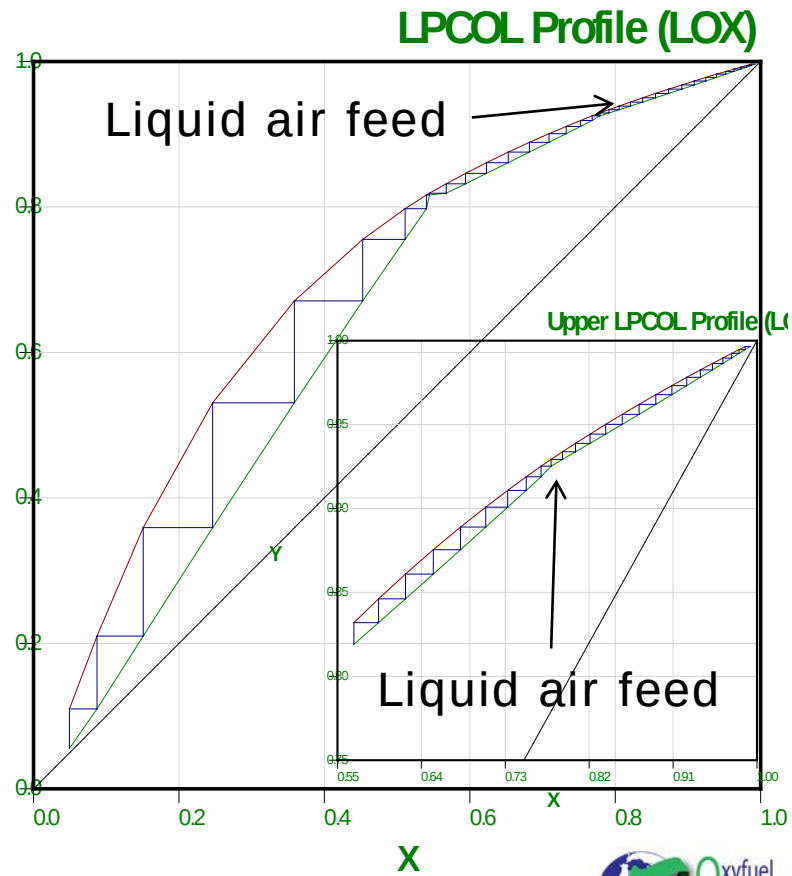

# Upper LP column - GOX

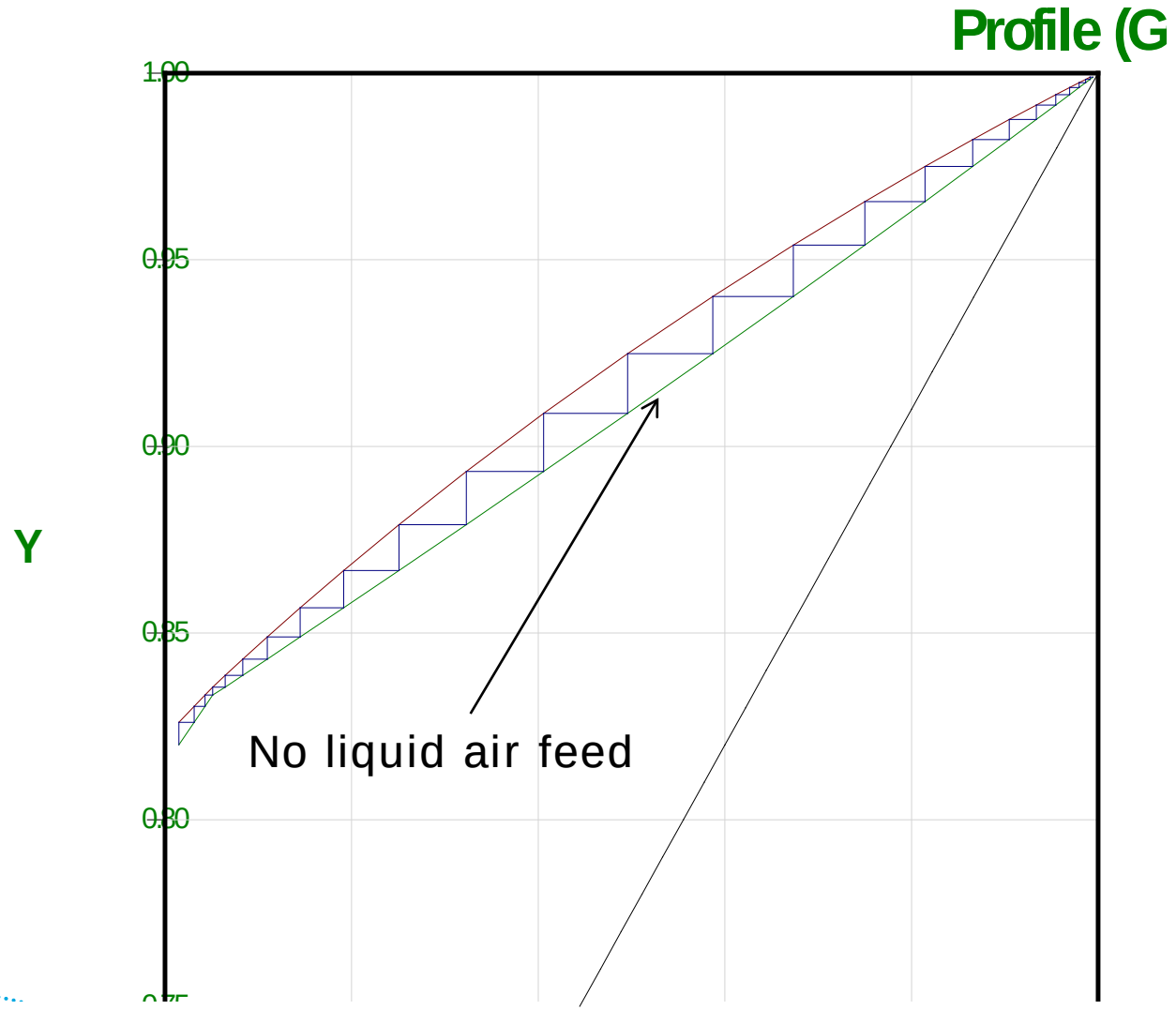

# Upper LP column - LOX

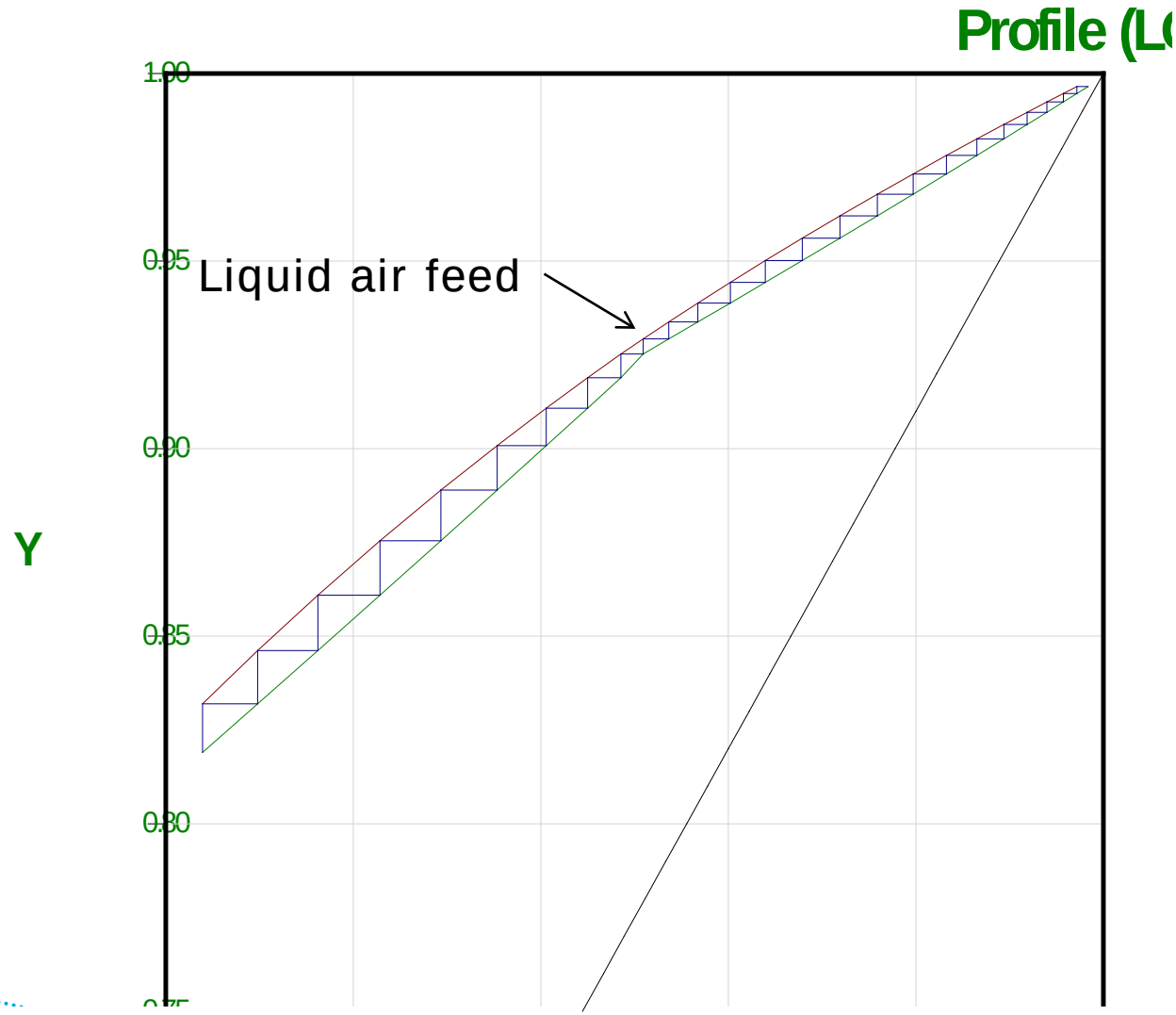

# “Modern” ASU for high pressure $O_2$ Pumped-LOX process

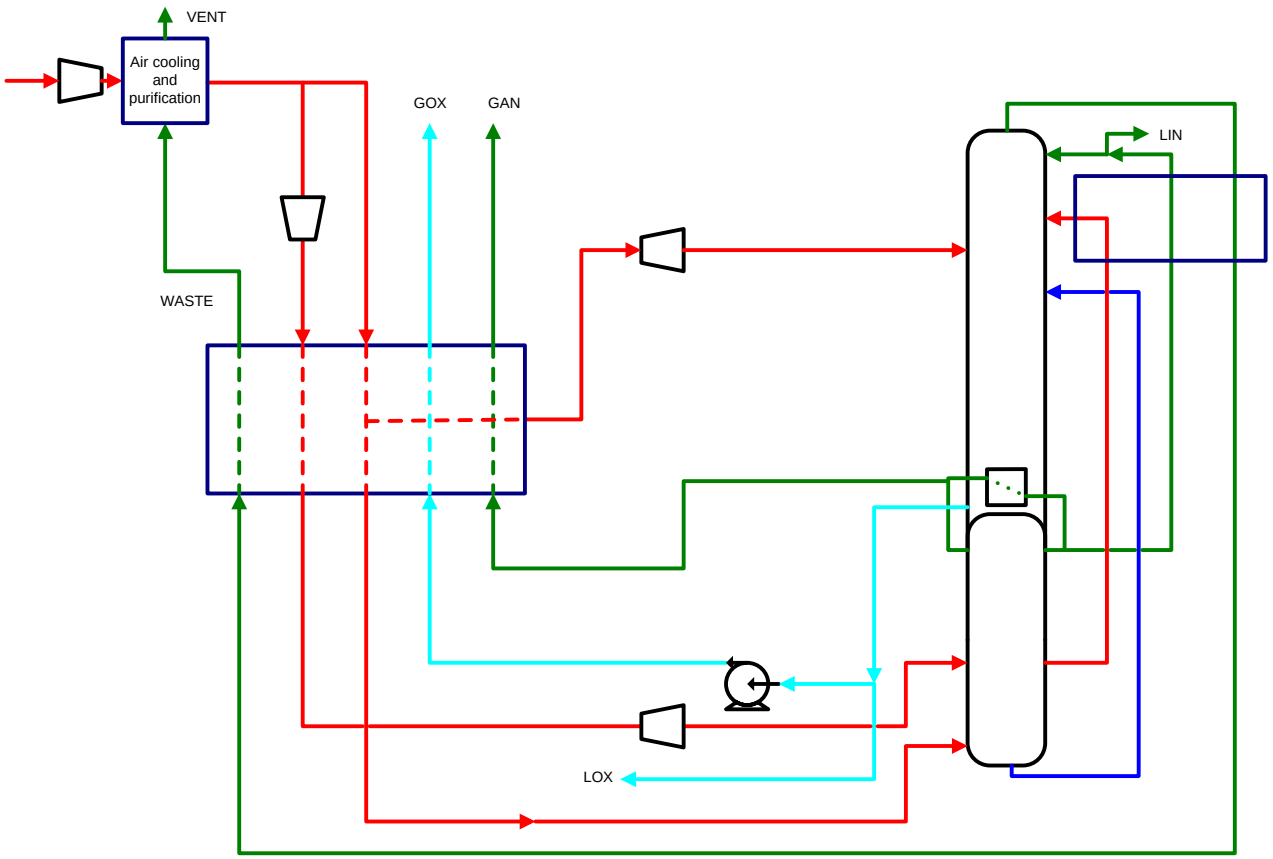

# Features of pumped-LOX process

- Similar to LOXBOIL but:
- Booster Air Compressor (BAC) added
- Pump increases LOX pressure
- LOX boiled at pressure in main heat exchanger by condensing boosted air
- Liquid air may be expanded in dense fluid expander (DFE)
- Refrigeration may also be provided by expander to HP column (from BAC)
- Flexible to design for wide range of liquid production (liquefaction power can be added to BAC)

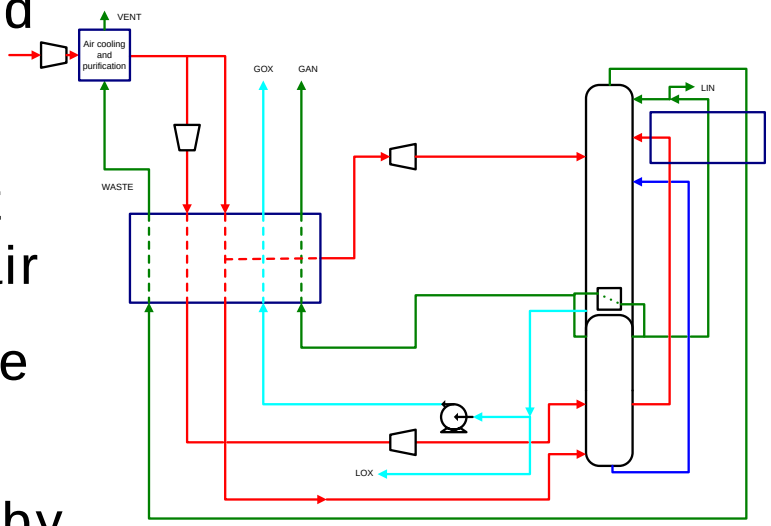

# Both Pumped-LOX and GOX compression are safe

| Safety measure | Pumped-LOX | GOX compression |
|---|---|---|
| Hydrocarbon control | Inherent concentration ratio limited to 5:1 | Limit concentration with LOX purge ( >0.2% air, <500:1) |
| $CO_2$/$N_2O$ freeze-out control | Limit breakthrough from front end TSA | Limit breakthrough from front end TSA |
| Safety standards –<br>Remove ignition<br>Remove promoter<br>Prevent propagation<br>Protect Personnel | Filtration<br>Min. $O_2$ velocity<br>Min. air pressure<br>Cold box relief | Minimum clearances<br>Non-contact seals<br>Oil/Grease-free<br>Compatible materials<br>Compressor barriers |

# Power Comparison – Loxboil with compression vs. pumped-LOX

- Compare powers over a range of oxygen pressures
- Pumped-LOX vs. LOXBOIL with compression to eliminate differences due to intermediate liquid air feed
- With and without dense fluid expander (DFE)
- Plant optimised for typical balance of power and capital cost
- **Pumped-LOX 3% better to 3% worse depending on oxygen pressure and plant configuration**

# Low purity oxygen has optimum purity

- Compare compression and separation power
  - When is it better to separate impurities than compress them?
- Considering ASU alone, delivering same contained oxygen
  - Separation power increases with purity (not pressure)
  - But power to compress impurities increases with pressure
  - For oxygen at any pressure, there is an optimum purity
    - total power increases above and below this purity
  - Optimum purity ~97% above ~80bar
    - separation power increases steeply above 97% purity
- Should also consider overall $CO_2$ capture system
  - $CO_2$ purification/compression power vs. $O_2$ separation power (no air leaks in pressurised systems, but impurities in fuel)
  - Usually increases optimum $O_2$ purity

# Optimal $O_2$ purity increases as pressure increases (ASU only)

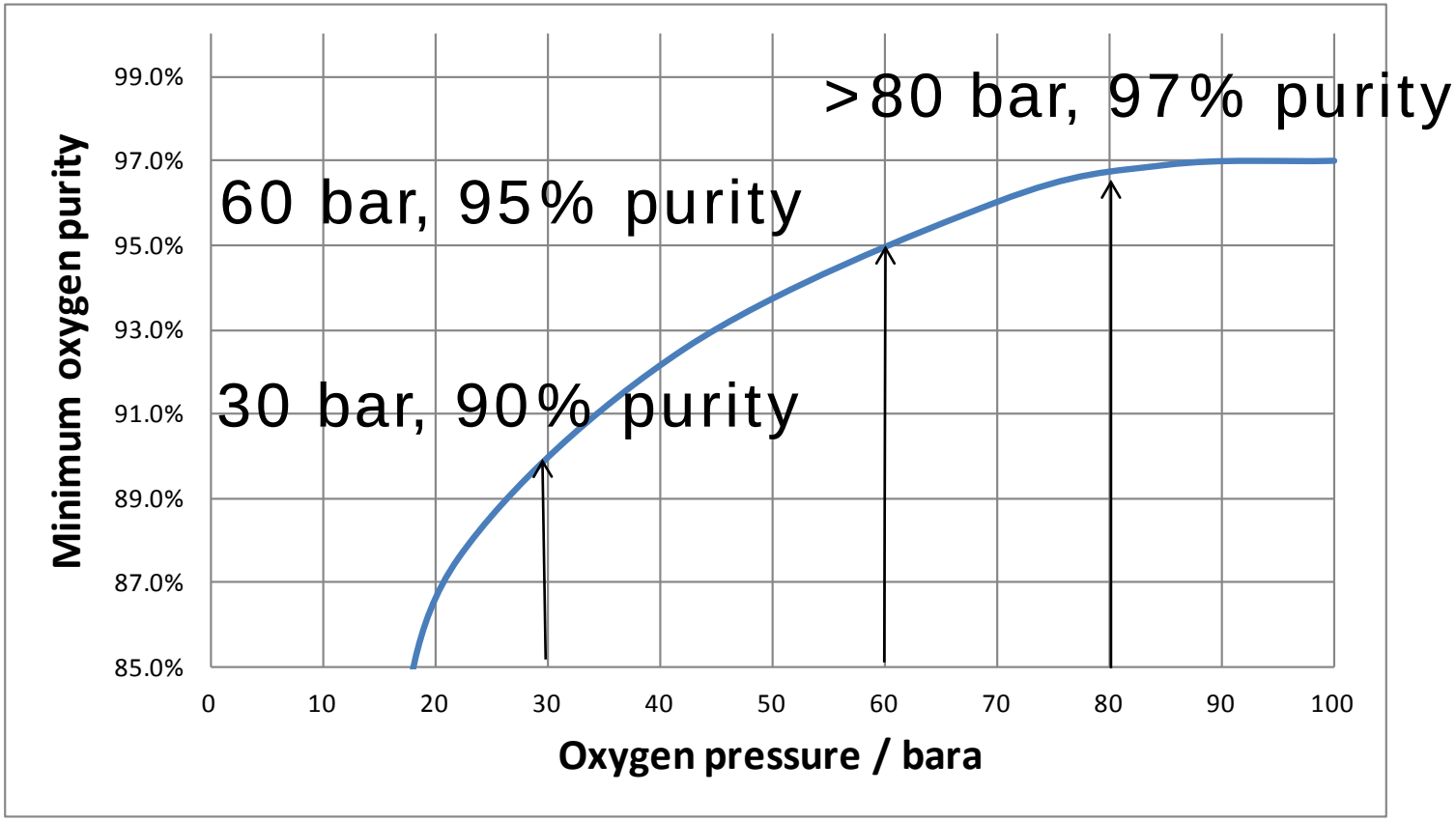


- Typical curve – details depend on process selection

# Conclusions

- A number of oxyfuel processes need high pressure oxygen
- ASU power depends mainly on ambient and product conditions
- Pumped-LOX and GOX compression have similar efficiencies
  - BAC power balances GOX compressor power
  - Varies ± few% with oxygen pressure and plant configuration
- Taking LOX vs. GOX from the LP column is a few % more efficient due to the benefit of liquid air reflux
- Both Pumped-LOX and GOX compression processes are safe
- Most modern ASUs use pumped-LOX cycles because of:
  - more flexibility in design and operation
  - benefits in capital cost and availability
- Optimum $O_2$ purity increases to ~97% above ~80bar

# Thank you…
# tell me more

Oxyfuel Combustion Conference 3

AIR PRODUCTS