DEVELOPMENT OF FLEXI-BURN® CFB BOILER CONCEPT FOR OXY-CFB-300 COMPOSTILLA PROJECT

Presented by:
Timo Eriksson, *Foster Wheeler Energia Oy, Finland*
Pablo Gutierrez Cerezales, *Endesa Generacion, Spain*

Co-financed by the European Union
European Energy Programme for Recovery

The Compostilla Project OXYCFB300

Contents of Presentation

- OXY-CFB-300 Compostilla demonstration project
- Development of Flexi-Burn® CFB technology
- Design basis
- OXY-CFB-300 boiler concept
- Design verification at CIUDEN TDP
- Performance parameters
- Integration CFB boiler - CPU
- Summary

OXY-CFB-300 Compostilla Project

European Energy Programme for Recovery (EEPR)

- In December 2009, the European Commission announced details of the six CO_2 capture and storage (CCS) projects which will receive funding under EEPR.
- The OXY-CFB-300 Compostilla project is one of the six projects, and one of the two based on oxy-fuel combustion (1 CFB & 1 PC).

OXY-CFB-300 Compostilla Project

- Beneficiaries ENDESA GENERACION, CIUDEN and FOSTER WHEELER
- Agreements signed in spring 2010
- Phase I, Technological development and design (FEED study 2010 - 2013)
- Final Investment Decision (FID) process 3/2013 - 10/2013
- Positive FID → Phase II, Construction of the demonstration project infrastructure

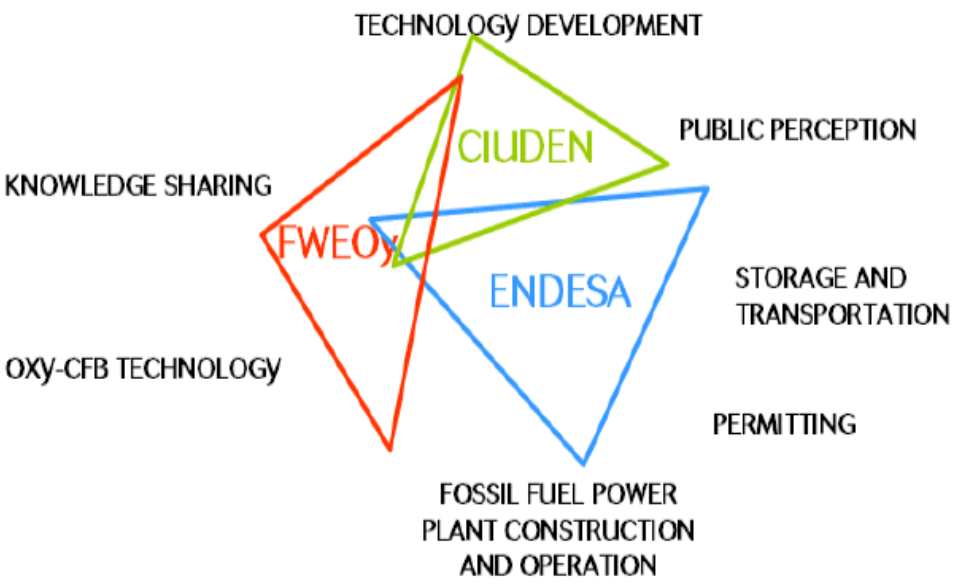

Flexi-Burn CFB Boiler Development

Development Timeline

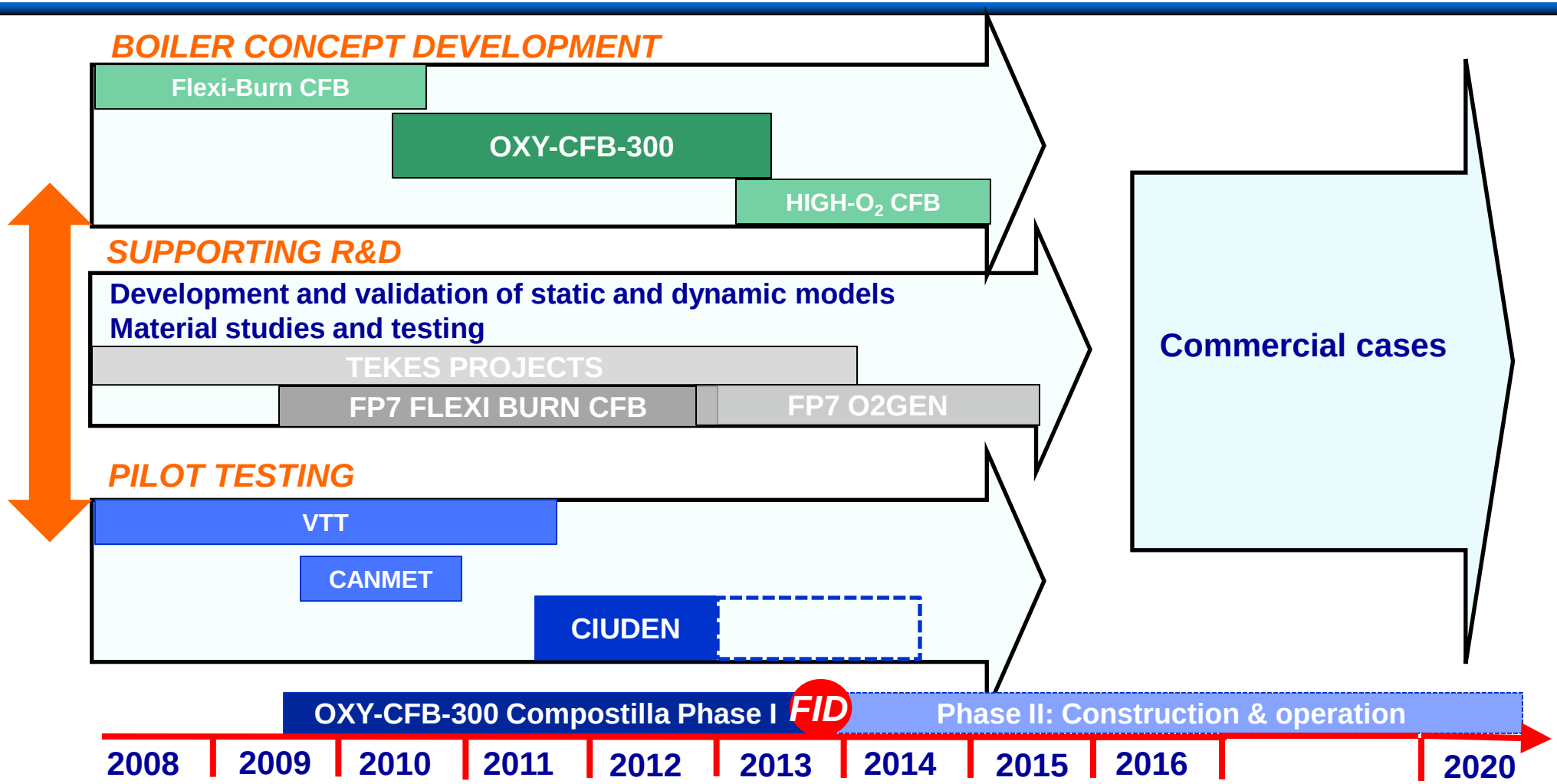

Flexi-Burn CFB Boiler Development

Recent Activities

R&D support - EU FP7 project "FLEXI BURN CFB" 2009 – 2013

- Design tool development toward oxy & air compatibility (combustion, heat transfer, fluid dynamics, emissions)
- Experiments in small and large scale pilots → scale-up information
- Performance of materials
- Dynamic simulations
- Concept optimization, etc.

Boiler design - Oxy-CFB-300 Compostilla project 2009 – 2013

- Engineering of Flexi-Burn CFB boiler
- Performance and cost estimates
- Design verification at CIUDEN TDP
- Support of FEED study by ENDESA → plant level estimates

Flexi-Burn CFB Boiler Development

CIUDEN TDP Tests

- Commissioning tests fall 2011 – spring 2012
- FLEXI BURN CFB (FP7) tests in July – September 2012
- EEPR tests (CPU integration) October – December 2012
- Altogether > 2000 hours of oxycombustion tests with anthracite, petcoke, sub-bituminous and bituminous coals, wood pellets or various blends
- So far all in so-called 1st generation oxy-CFB (Flexi-Burn)
  - < 30 % O_2 in oxidants
  - Max. fuel input ~ 18 MW

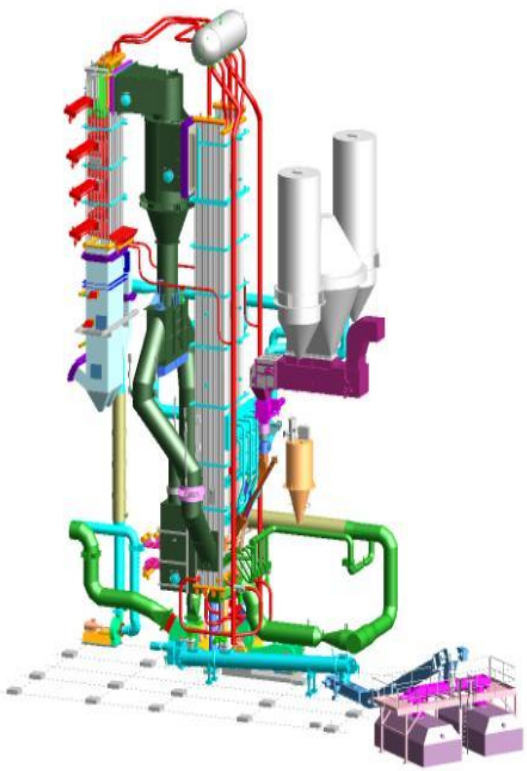

OXY-CFB-300 Boiler Design

Design Basis

Site Conditions

- Site location: Cubillos del Sil, León, Spain
- Ambient pressure: 94.8 kPa
- Ambient temperature (average): 12.6 °C

Water – Steam Circuit

- Ultra-supercritical (USC) steam parameters with one reheat stage; sliding pressure operation
- Oxy-fuel combustion is considered as the primary operation mode of the boiler, and 100 % MCR load is defined for the oxy mode. Start-up occurs in air mode.
- Load range 40 – 100 % BMCR in oxy mode and 40 – 90 % BMCR in air mode; design considering daily load cycling and primary / secondary grid control

Feed Materials

- Design fuel is 70/30 w-% mixture of Spanish anthracite and petroleum coke:
  - LHV 23 MJ/kg (as received)
  - Ash content 25 % and sulfur content 2.8 % (dry)
- Performance studied also with bituminous and sub-bituminous coals and various blends, including also biomass
- Spanish limestone with 97 % $CaCO_3$
- Oxygen purity 96.6 %-v

OXY-CFB-300 Boiler Design

Scale-Up

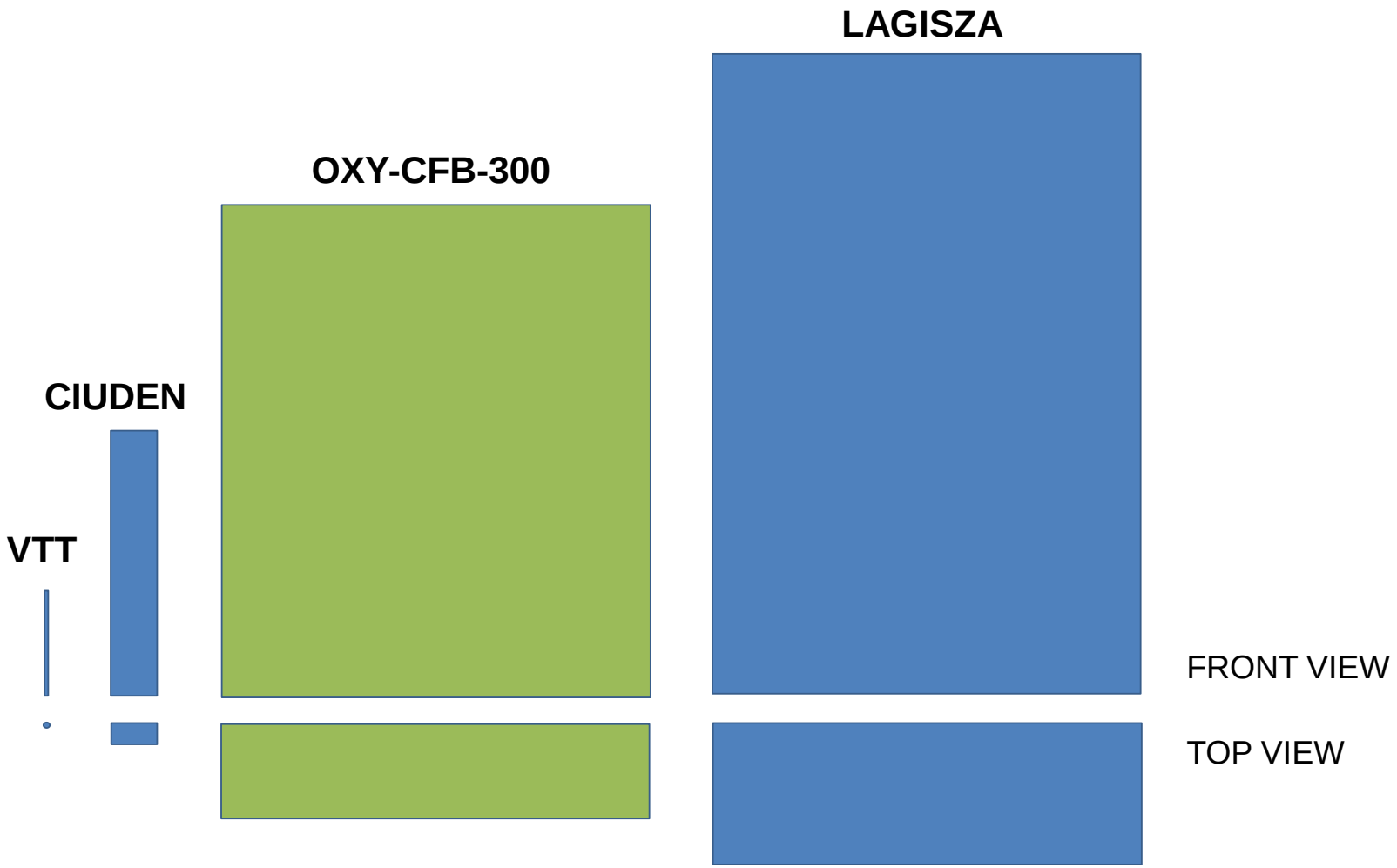

OXY-CFB-300 Boiler Design

Scale-Up

Parameter	Unit	CIUDEN	OXY-CFB-300	Lagisza
Furnace dimensions				
Height	m	20	37	48
Width	m	2.9	28	27.6
Depth	m	1.7	7	10.6
Number of separators	-	1	4	8
Thermal power(1				
Oxy mode (max.)	MW	30	708	--
Air mode	MW	14.5	647	966
Steam parameters(2				
SH steam flow	t/h	47.5	845	1300
SH steam temperature	°C	250(3	600	560
SH steam pressure	bar	30	279	275
RH steam flow	t/h	--	745	1101
RH steam temperature	°C	--	601	580
RH steam pressure	bar	--	56.5	50.3
Feedwater temperature	°C	170	290	290

Notes:

1) At CIUDEN fuel input; in others heat to steam

2) Steam parameters in Lagisza at turbine inlet

3) After spraying

OXY-CFB-300 Boiler Design

Scope of Work

Studies of different design alternatives of Flexi-Burn CFB boiler to find the optimal configuration for CFB hot loop, HRA, water and gas preheating (boiler & process models, layout engineering)

Basic engineering

- Oxycombustion specific features had to be studied and solutions developed, taking also into account the requirements of operation in air firing mode and transitions between the two modes.
- Engineering in the “conventional area” has been done as deemed necessary for the FEED.
- R&D support e.g. in dynamic simulations and material studies for different areas (furnace, INTREX, FG and oxidant systems)

Design verification based on conclusions from CIUDEN tests

- Design changes if necessary
- Optimization of operating parameters

OXY-CFB-300 Boiler Design

Water - Steam Circuit

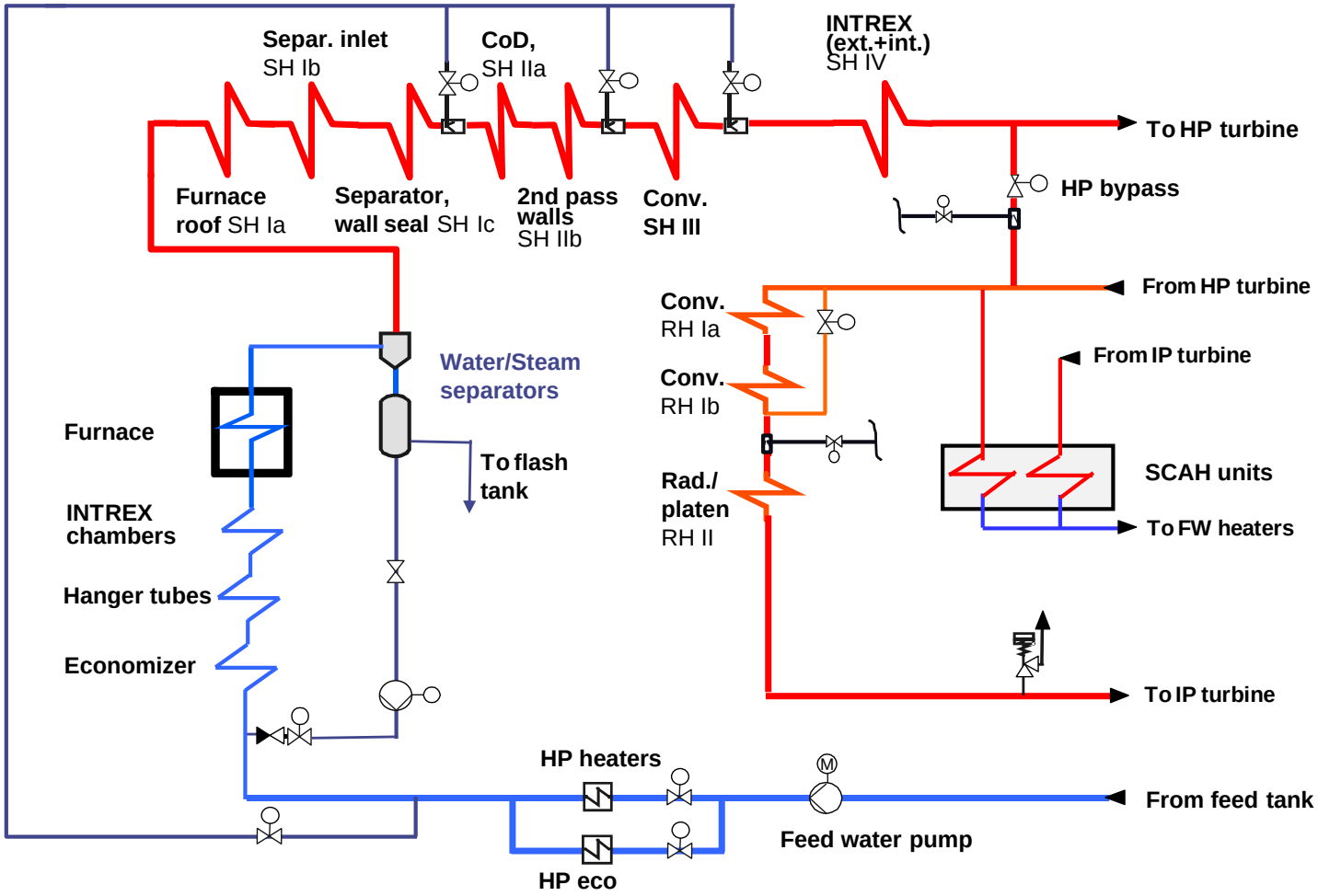

OXY-CFB-300 Boiler Design

Block Flow Diagram

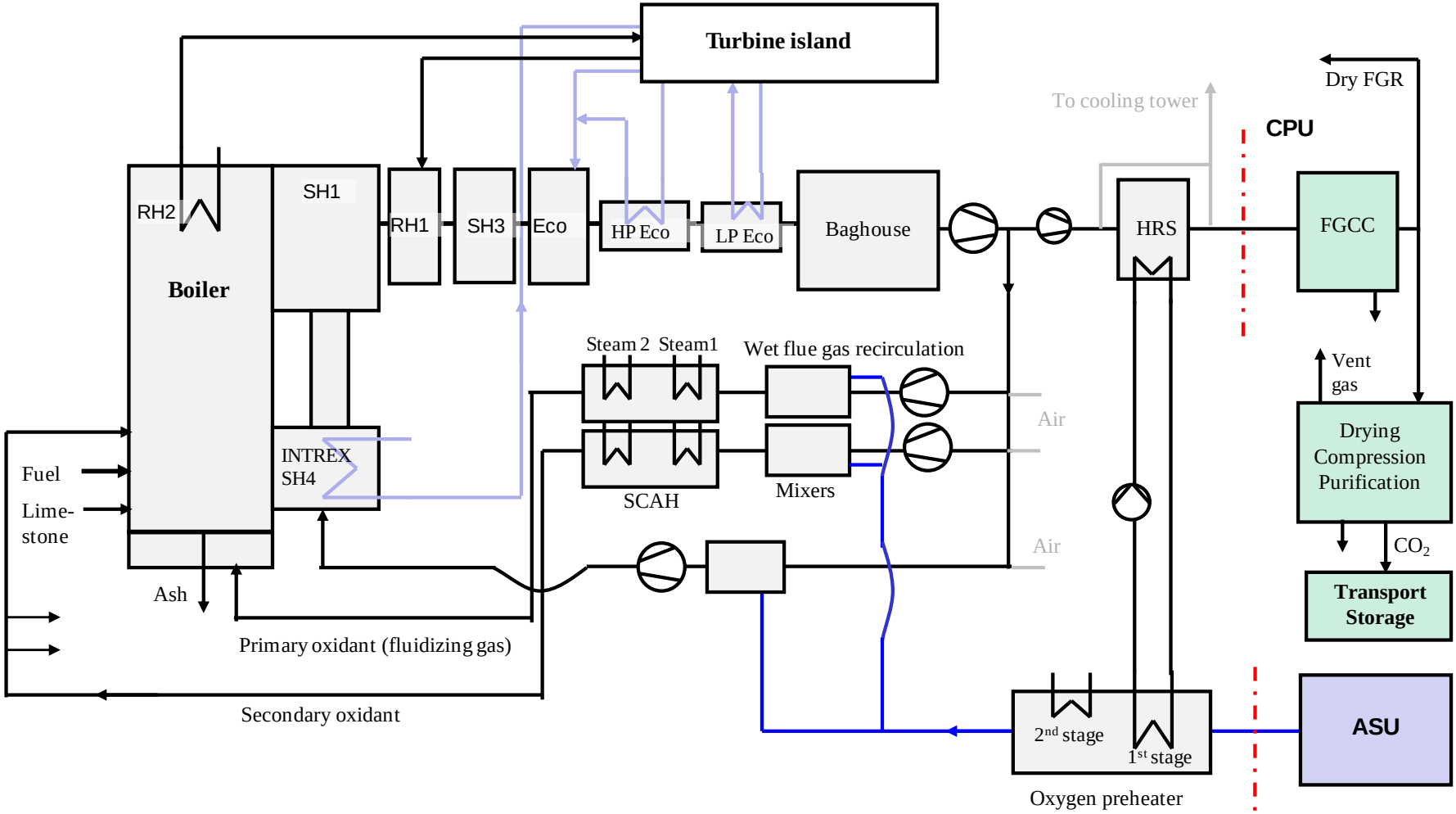

OXY-CFB-300 Boiler Design

Main Features of the Selected Concept

- There is no direct heat recovery from flue gases to oxidant (no RAPH or alike).
- Remaining flue gas heat (after economizer) is utilized in HP Eco and LP Eco.
- Simple emissions reduction systems:
  - Limestone injection into furnace
  - SNCR for alternative fuels (no need in design conditions)
  - Bag filter unit for low emissions and diverse fuel selection
  - Further purification at CPU
- Heat in gas to CPU (before FGCC) is utilized for oxygen preheating by indirect heat exchange in heat recovery system (HRS) with plastic HX tubes.
- Oxygen from ASU is preheated up to 170 °C with hot water and condensate from LP Eco.

OXY-CFB-300 Boiler Design

Main Features of the Selected Concept

- Fans with flexible air/RFG inlet are used in the primary and secondary oxidant systems.
- High-pressure fans with flexible air/oxidant inlet are used in the h-p oxidant system.
- Oxidant is prepared in three static mixers in the primary, secondary and h-p oxidant systems.
- Main oxidant (or air) streams are preheated in two 2-stage SCAH (steam coil airpreheater) units.
- Air ingress and flue gas leaks are minimized in structures and equipment.
- Also various smaller air streams are replaced by other gases in oxy mode. Dry RFG is used in the biggest consumers, i.e. pneumatic conveying.

OXY-CFB-300 Boiler Design

Furnace Design

- Low mass flux BENSON once-through technology licensed by Siemens AG, Germany
- Furnace with gas tight membrane wall structure
- Heat surface setup shall fulfill the needs of SH and RH steam in both operating modes, within the load range.

1. Furnace (evaporator walls, roof SH I, platen RH II at top)
2. INTREX (SH IV, 4 units)
3. Solids separator (SH I; 4 pcs)
4. Cross-over duct (SH II)
5. Heat recovery area, HRA (walls SH II; tube bundles RH I, SH III, Economizer)
6. HP Eco and LP Eco
7. Flue gas to filter unit

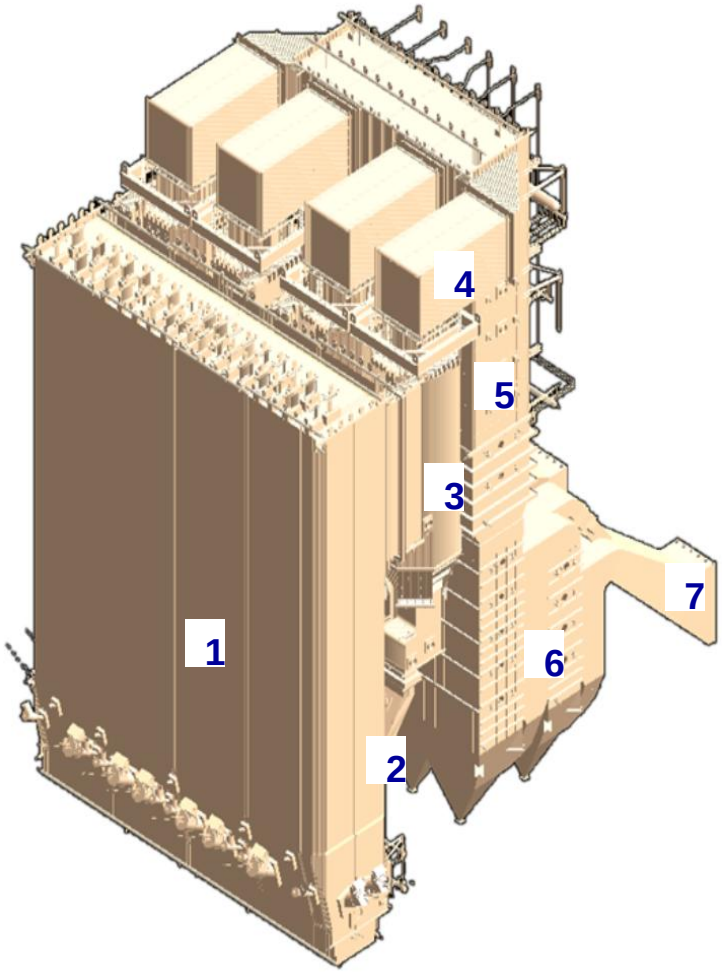

OXY-CFB-300 Boiler Design

Analysis of the Final Furnace Configuration with 3D Model

Furnace optimization & design check by 3D modeling:

- Objective: uniform temperature, flue gas and heat transfer profiles in the furnace
- Design items: furnace geometry; fuel and sorbent feed points; secondary oxidant injections; in-furnace HX's; separators and solids return points
- Performed in cooperation with Lappeenranta University of Technology (LUT)

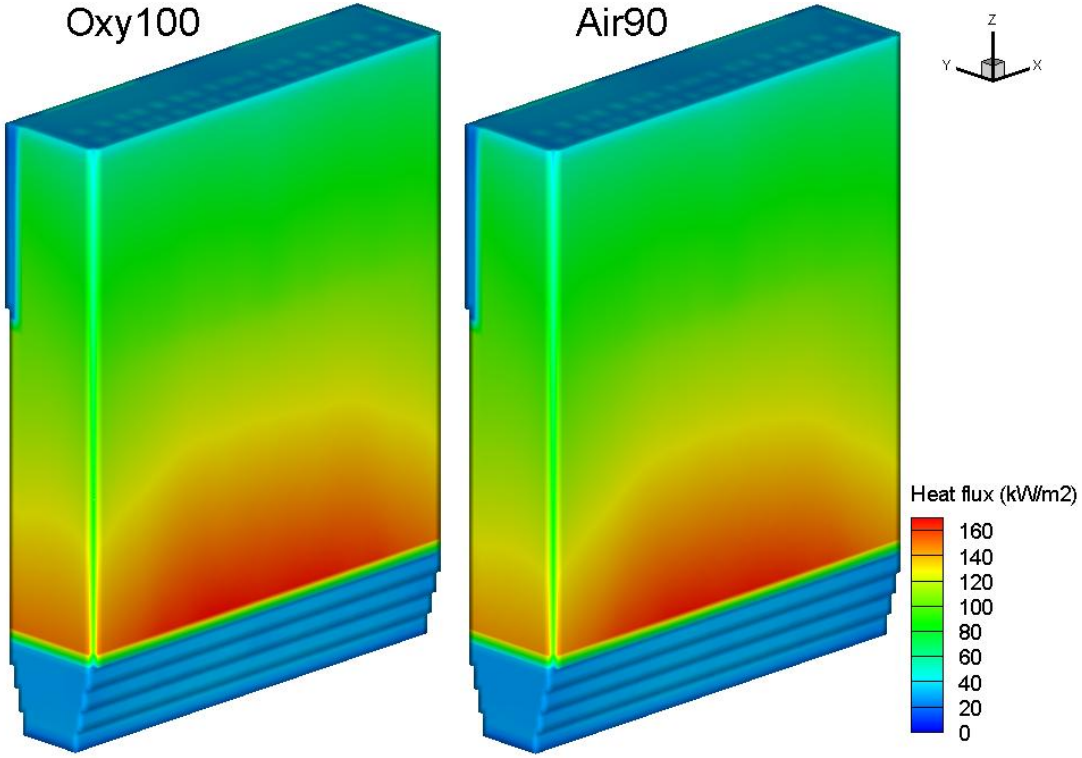

Calculated heat flux distributions in Oxy mode 100 % MCR (left) and Air mode 90 % MCR (right): heat fluxes are below the max. tolerable values indicated by thermohydraulic investigations of the evaporator.

OXY-CFB-300 Boiler Design

Analysis of the Final Furnace Configuration with 3D Model

Calculated temperature distributions in Oxy mode (100 % MCR):

- On the left side, the fuel feeding is divided evenly for all the feed points (9 pcs).
- On the right, the fuel feeding distribution has been adjusted to achieve more uniform distribution.
- Furnace temperature profiles could also be adjusted with oxidant O_2 levels, especially the PO O_2.
- And with non-symmetric oxidant distribution (horizontal / vertical)
- For cost and layout reasons the current design includes only one mixer for each main oxidant stream.

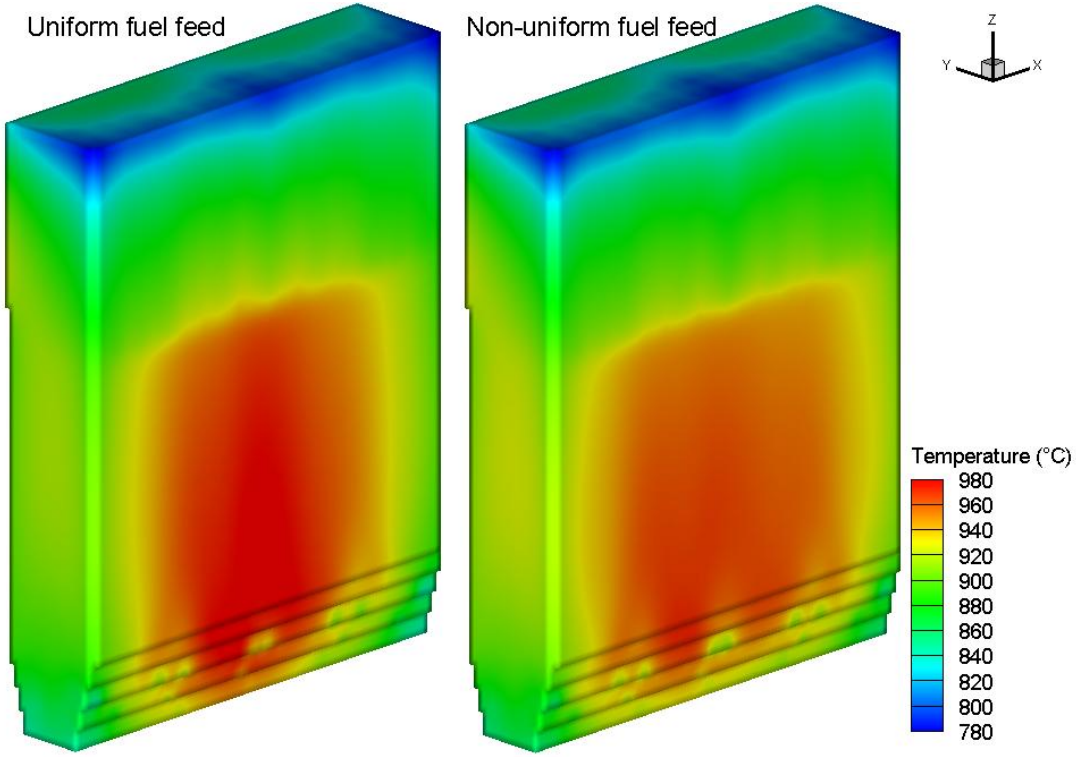

OXY-CFB-300 Boiler Design

Analysis of the Final Furnace Configuration with 3D Model

Sulfur capture in different operating conditions:

- In air-fired mode and at full load in oxygen-fired mode, the operating point is above calcination temperature => sulfur capture by indirect sulfation.
- At low load (oxy), the furnace temperature is lower than the calcination temperature and the sulfur capture is by direct sulfation.
- The 3D-modeling enables to evaluate the different sulfur capture modes.

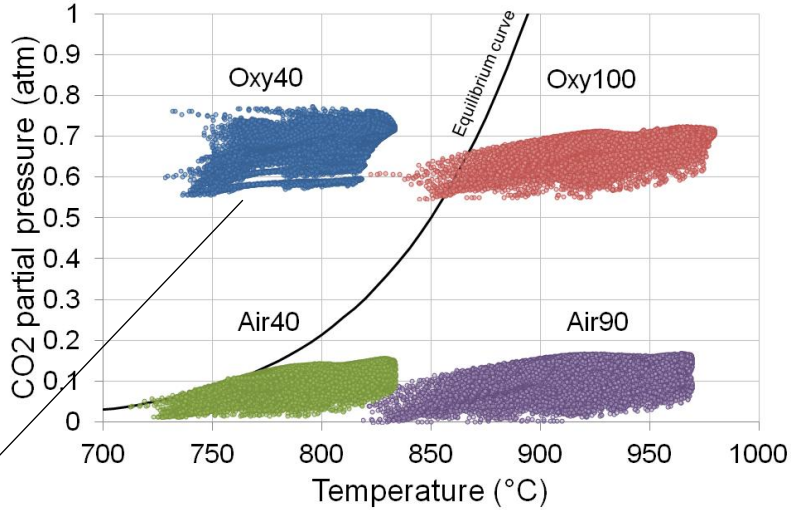

Operating condition in each calculation cell inside the furnace.

Sulfur capture by indirect/direct sulfation at 100% MCR and 40% MCR in oxygen-fired mode.

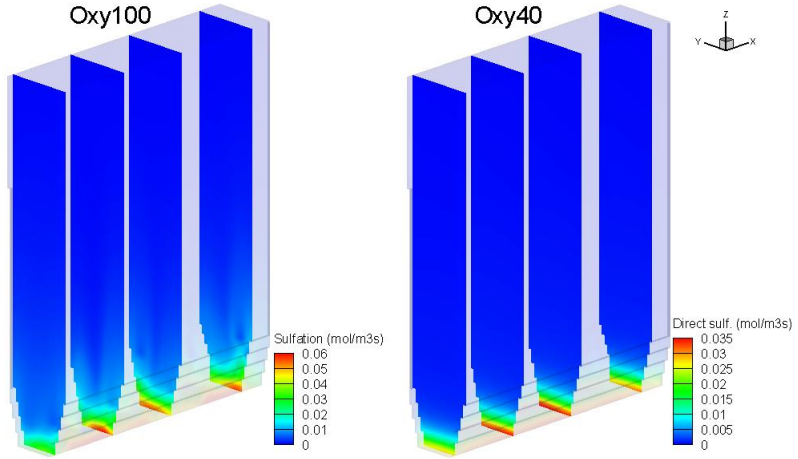

OXY-CFB-300 Boiler Design

Thermohydraulic Investigations of the BENSON Evaporator

- In a CFB boiler a waterwall material that does not require post-weld heat treatment can be used even with USC steam parameters due to the relatively low heat fluxes.
- To confirm the validity of a design and material, the material temperatures and stresses in waterwalls have to be calculated.
- The task was executed by SIEMENS in cooperation with FWEOy, once the main furnace dimensions and steam parameters had been frozen.
  - Detailed investigations of evaporator thermohydraulic behavior at steady state conditions for different load case specifications
  - Investigation of static and dynamic stability of the evaporator
  - Tube cooling analysis (investigation of inner heat transfer and tube wall temperatures)
  - Thermal stress investigation
- Conclusion: reliable design regarding tube cooling and static and dynamic stability with both tube sizes studied → tube selection based on other criteria such as structural issues

OXY-CFB-300 Boiler Design

Material Selections

Concerns relating to materials performance in oxygen-fired CFB boiler:

- Different flue gas composition in the process due to absence of nitrogen (from air)
  - Porous oxide formation caused by increased H_2O (and CO_2) content
  - Carburisation caused by high CO_2 content and carbon-rich deposits
  - Higher SO_x and HCl content in combustion gases
- Use of oxygen and potentially high-O_2 oxidant

Materials research program addressing the issues above:

- Materials testing in laboratory conditions
- Thermodynamic process calculations to understand the impact of process conditions prevailing in particular process area on process behavior and/or materials
- Field tests with corrosion, fouling and acid dew point probes at TDP
- Study of oxygen safety in oxidant systems

Conclusions:

- Pressure part material selection based on steam conditions appears valid.
- In flue gas and oxidant ducts, avoiding low surface temperatures is important (besides material selection). Insulation and avoiding air in-leakage are important.
- According to thermodynamic calculations and probe tests, limestone injection is an effective measure against acid dew point issues.

OXY-CFB-300 Boiler Design
Layout

Major items are boiler house including furnace, HRA and auxiliary equipment; baghouse; main fan house; and HRS building

Extensive ducting (RFG, oxygen, air, flue gas) → design issues:

- Placement of flexible air / RFG / oxidant fans
- Oxidant preheating arrangements
- Use of ducts and equipment in different modes and transitions
- Purging of ducts
- Required length of mixers to ensure homogeneity of oxidant
- Flow measurements (straight lengths)
- Corrosion risks
- Mechanical issues
- Available space, service routes
- Potential safety distances (ventilation)
- Pressure drop
- Investment cost
- Positioning of air inlets
- Prevention of freezing
- Noise suppression

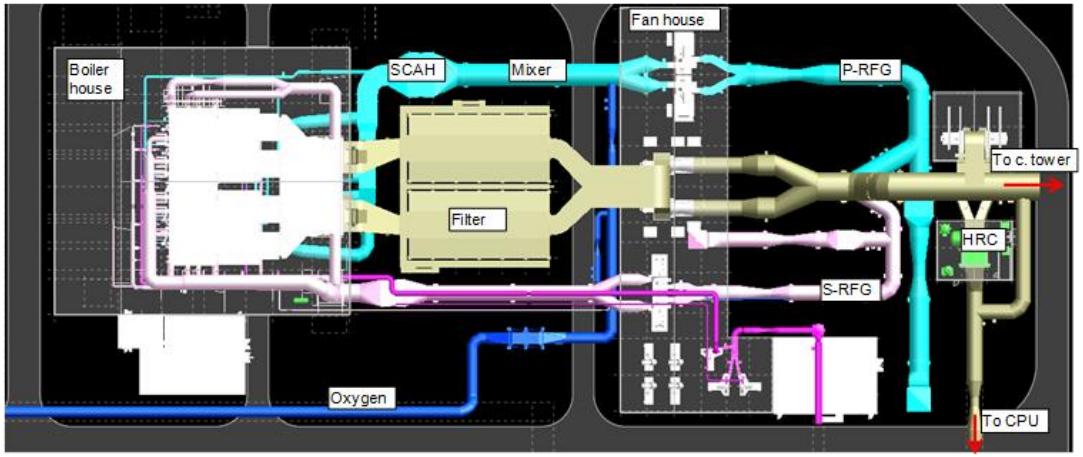

OXY-CFB-300 Boiler Design

Layout

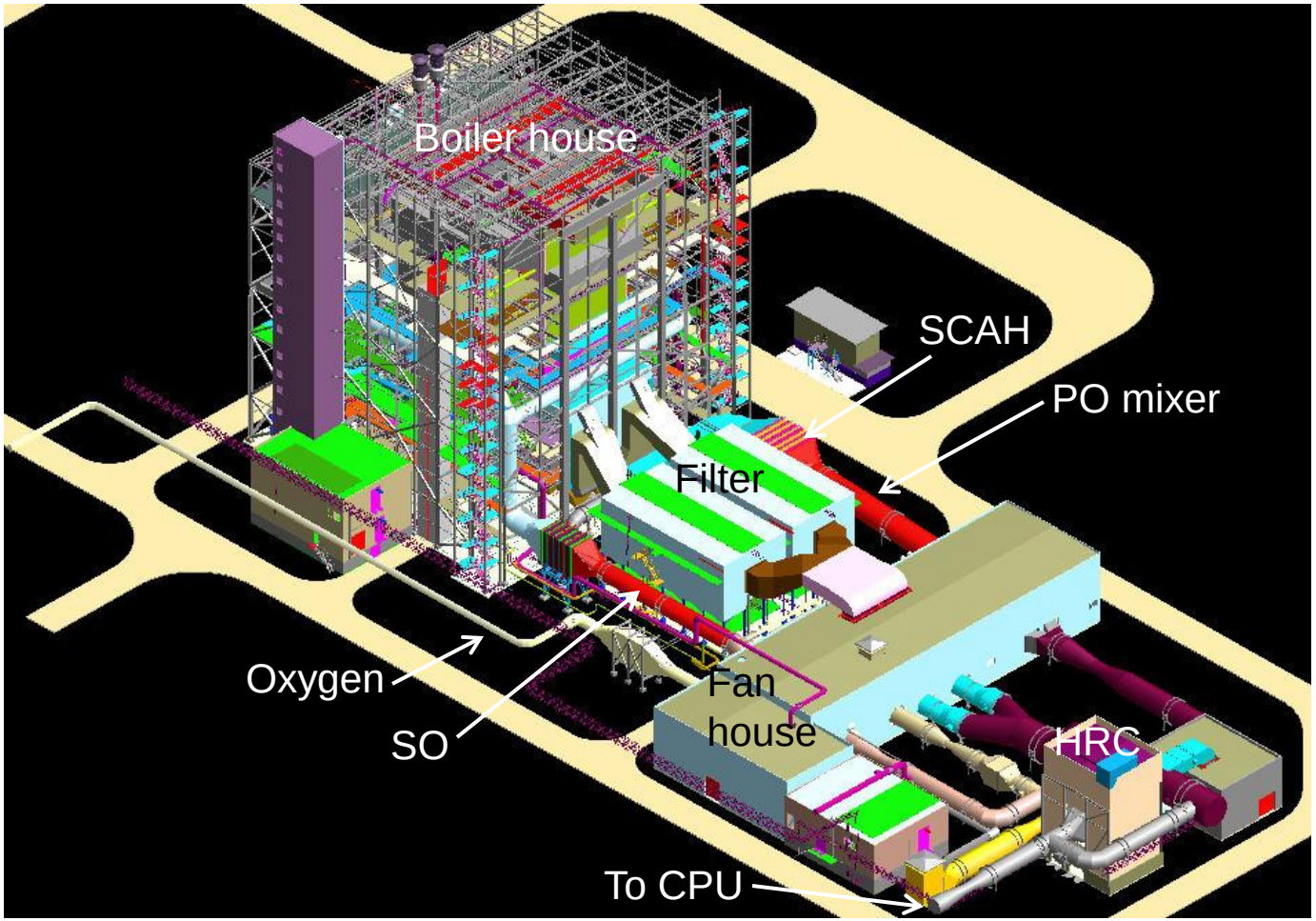

OXY-CFB-300 Boiler Design

Main Controls of the Boiler

- The operator can select the boiler load control mode from steam pressure control or steam flow control.
- The boiler master controller will control fuel, feedwater and air/oxygen/oxidant flow through appropriate masters to meet pressure/mass flow set point value.
  - Oxygen and RFG flows to PO and SO mixers are controlled independently. O_2 content of each oxidant stream is controlled by corresponding RFG flow (fan with speed control).
  - The operator can adjust oxidant O_2 setpoints. It is a feasible method for adjusting furnace temperatures, unavailable in normal air firing, further improving the fuel flexibility .
- Boiler master controller output is forwarded to ASU and CPU master controllers.
  - ”ASU follows”; ”CPU follows” is the basic approach.
  - ASU keeps pressure in the GOX duct at setpoint, utilizing buffers when needed.
  - CPU adjusts the pressure at its inlet, i.e. at boiler – CPU interface.

OXY-CFB-300 Boiler Design

Design Verification and Optimization based on CIUDEN Results

Heat transfer in furnace (and HRA)

- Especially solids density profile in oxy vs. air mode
- And heat transfer coefficient vs. suspension density in oxy and air mode
- No need for changes in design or performance predictions

Combustion performance

- No clear difference in UBC between air and oxy modes
- Adjustments done in fuel-dependent design parameters

Sulfur capture

- With design fuel, very efficient capture at high temperature while less efficient capture at low temperature
- Furnace temperatures increased throughout load range through small design changes and optimization of operating conditions
    - Control of furnace temperature level by oxidants' O_2 levels demonstrated

INTREX design

- Fluidization with h-p oxidant feasible in spite of some loss of CO_2 (recarbonation)
- No changes in design

OXY-CFB-300 Boiler Design

Boiler Performance

- Full load in oxy mode
- Max. load in air mode 90 % BMCR (gross)
- Feedwater temperature same in both modes
- Modified sliding pressure applied

Parameter	Unit	Oxy mode	Air mode
Load (of BMCR)	%	100	90
Feedwater temperature	°C	290	281
Main steam(1			
Flow rate	kg/s	235	211
Temperature	°C	600	600
Pressure	bar, a	279	260
Reheat steam(1			
Flow rate	kg/s	208	185
Temperature	°C	601	601
Pressure	bar, a	57	50
Notes 1) At boiler exit			

OXY-CFB-300 Boiler Design

Boiler Performance

- Sulfur capture more efficient in oxy mode
- HRA outlet temperature adjustable (LP Eco)
- Design optimized for oxy mode → part of flue gas heat not recovered in air mode

Parameter	Unit	Oxy mode	Air mode
Load (of BMCR)	%	100	90
Fuel flow rate	kg/s	30.9	28.2
Limestone flow rate	kg/s	6.9	7.2
Oxygen flow rate (gross)	kg/s	58.6	--
Air flow rate (gross)	kg/s	--	261
Primary oxidant O_2	%-vol	23.5	20.7
Bed temperature	°C	904	896
Furnace exit temperature	°C	931	919
Filter inlet temperature	°C	161	144
Flue gas outlet temperature	°C	113	129
Flue gas flow rate, total	kg/s	333	283
Recycled flue gas (wet)	kg/s	231	0
Flue gas flow rate, outlet	kg/s	102	283

OXY-CFB-300 Process Integration

CPU Diagram

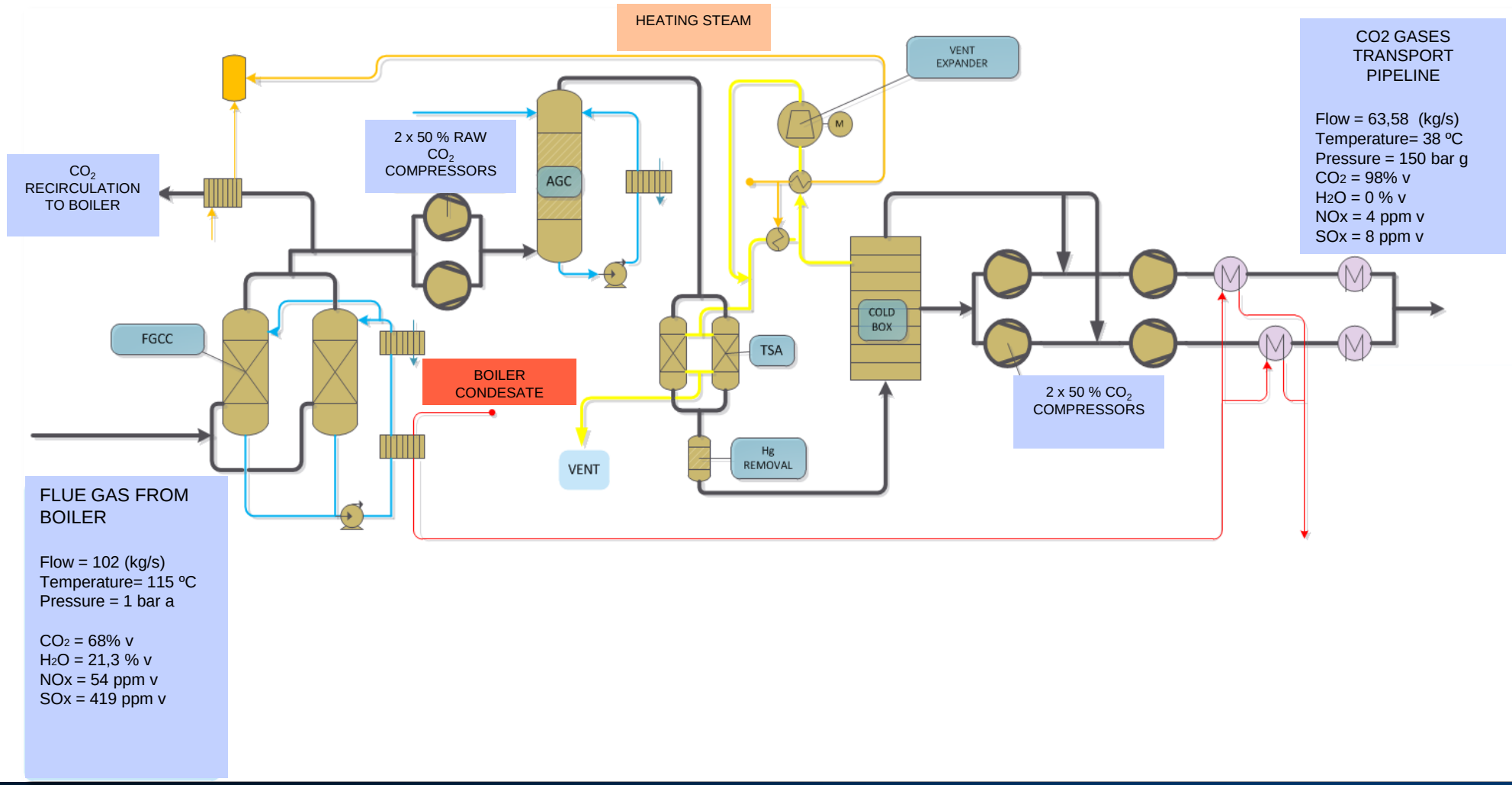

OXY-CFB-300 Process Integration

Final Process Diagram

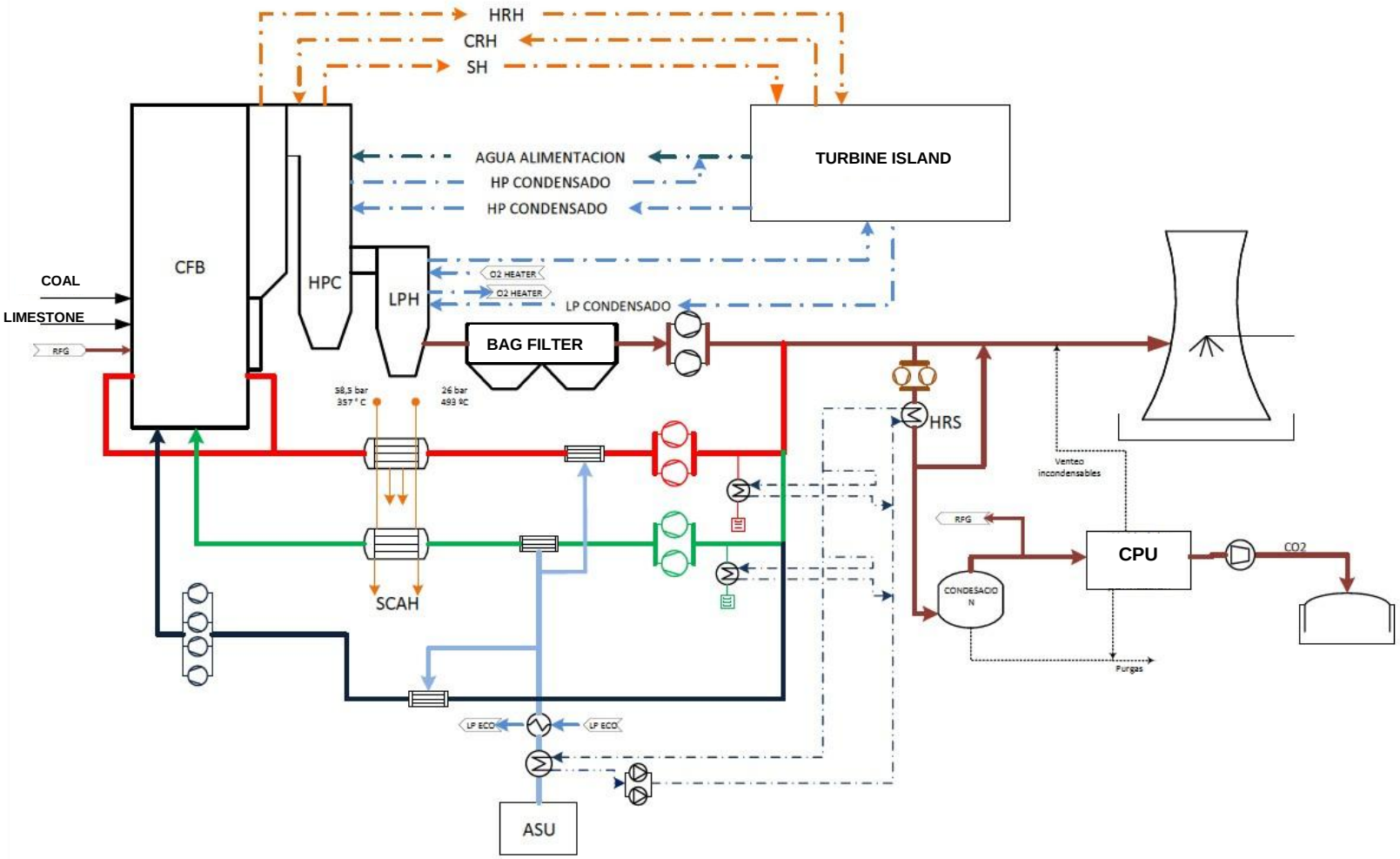

Summary

- Boiler design based on Foster Wheeler's Flexi-Burn CFB technology has been developed for the capture plant FEED in the OXY-CFB-300 Compostilla project.
- The Flexi-Burn CFB technology has been succesfully demonstrated for carbon capture in large pilot scale at the CIUDEN Technology Development Plant.
- Experiences gained at the TDP have been used for validation of boiler design tools and process models, and applied in the final boiler design.
- Integration of CFB Boiler and CPU allows to recover heat and condensate water to improve the final process performance.
- The capture technology is considered ready for demonstration to prove the functionality of the developed process in practice.
- The outcome of the ongoing Final Investment Decision process depends also on economical viability in the prevailing market conditions, financial and regulatory issues as well as public acceptance.

Thank You!

The work leading to these results has been co-financed under the European Community's Seventh Framework Programme (FP7/2007-2013) under grant agreement n° 239188 and the EEPR09-CCS-COMPOSTILLA Project (European Union's European Energy Programme for Recovery).