Process design of post-combustion CO_2 capture from a natural gas combined cycle using Ca-looping process

R. Anantharaman, D. Berstad, K. Jordal
SINTEF Energy Research, Trondheim, Norway

Bergen, Norway
18th September 2013

BIGCCS International CCS Research Centre

Integrated Assessment in BIGCCS

- Systematic benchmarking of CO_2 capture processes using consistent boundary conditions to
  - Identify potential of capture processes
  - Provice directions for future research such as material development
- Muti-scale modeling of processes for integrated assessment

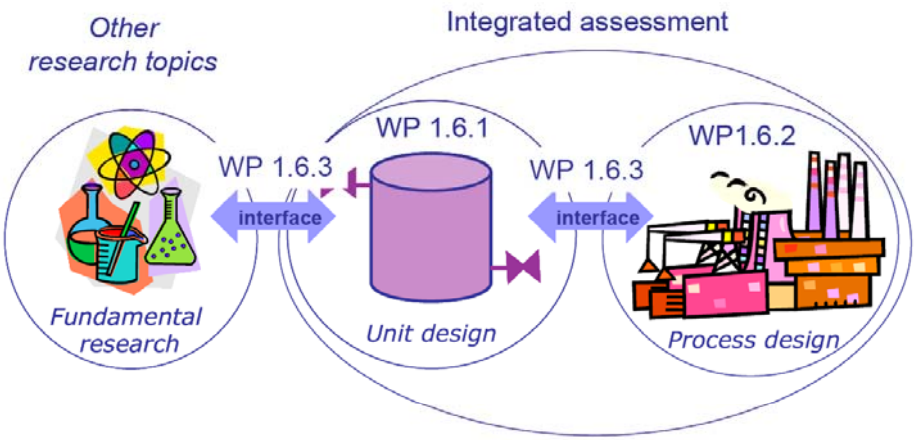

Ca-looping cycle for CO_2 capture

- Significant number of studies for capture from coal fired power plants

$$CaO + CO_2 \rightleftharpoons CaCO_3$$

$\Delta H°r = -178$ kJ/mol

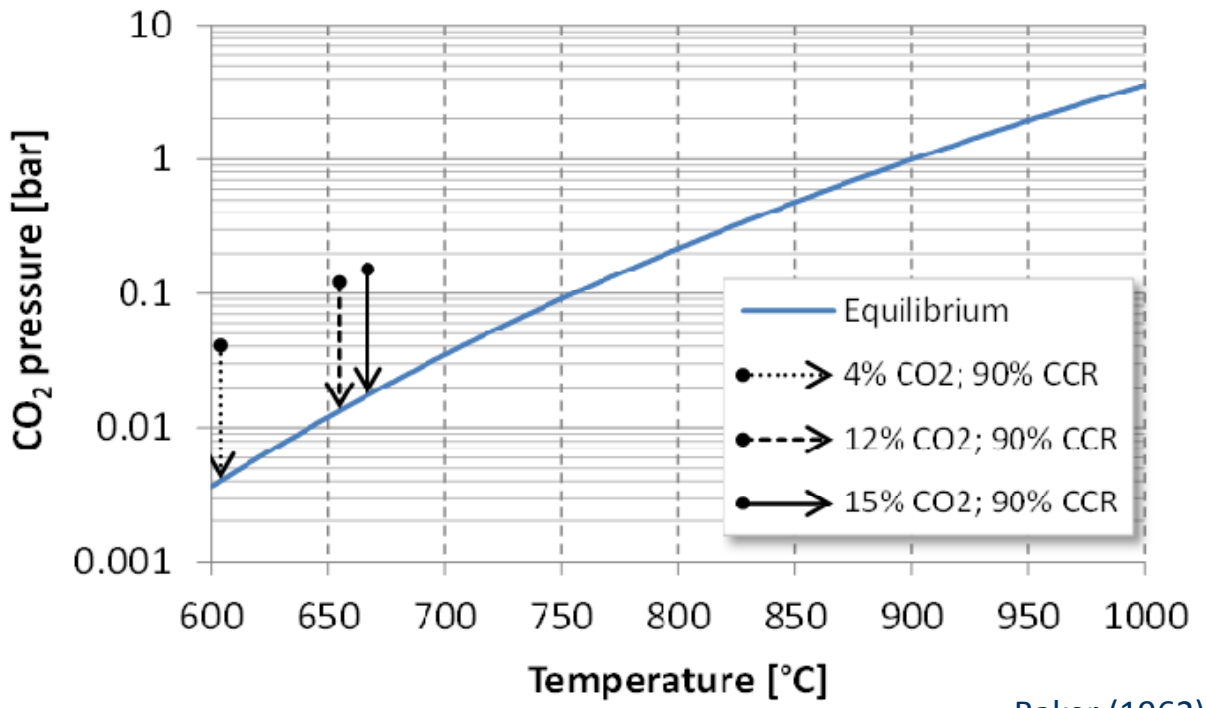

Baker (1962)

NGCC with Ca-looping CO_2 capture

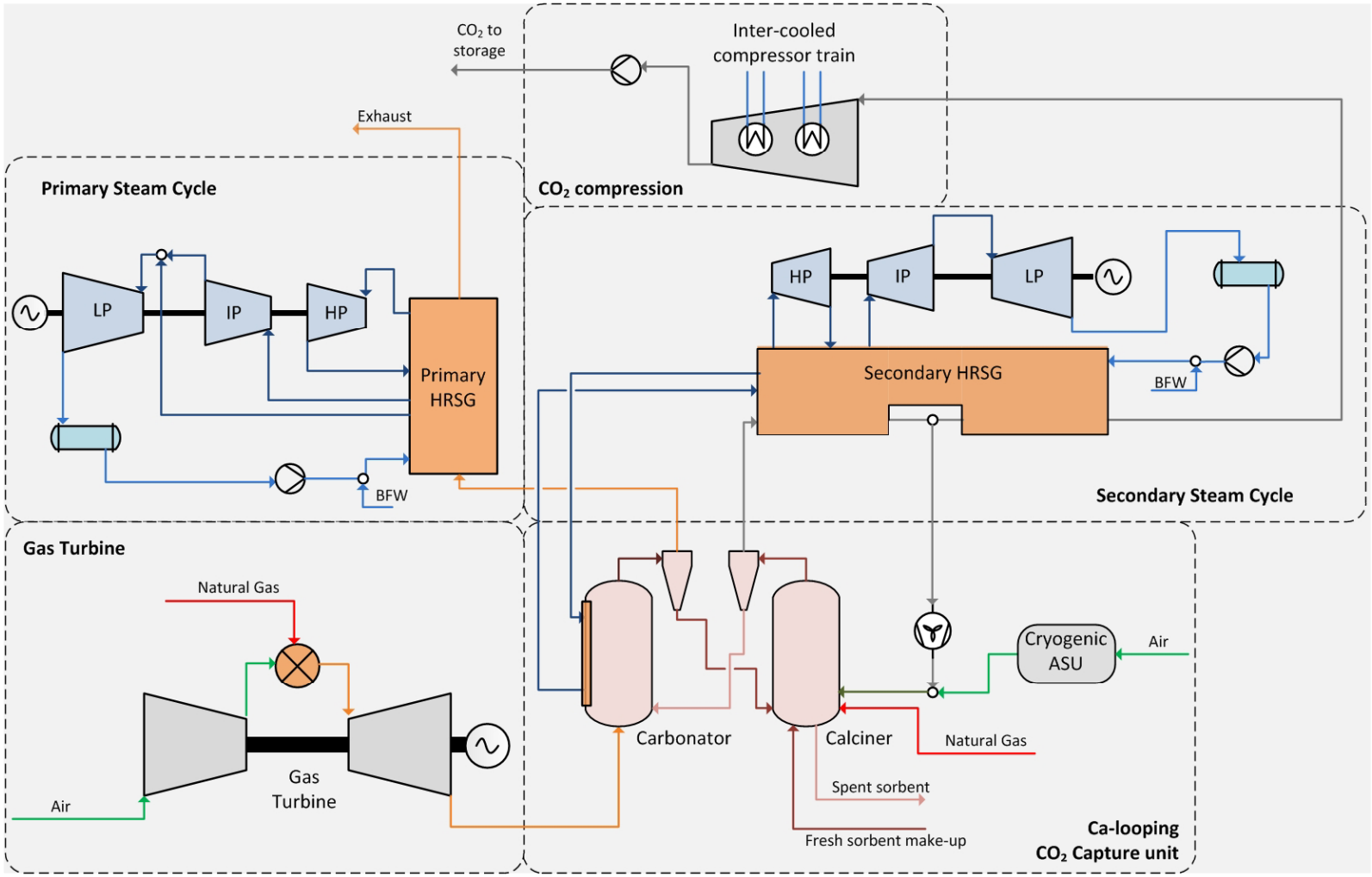

Ca-looping cycle model

- Simple steady state heat/mass balance model in Excel
- Model allows to identify effect of different operating parameters of the Ca-looping process on overall process

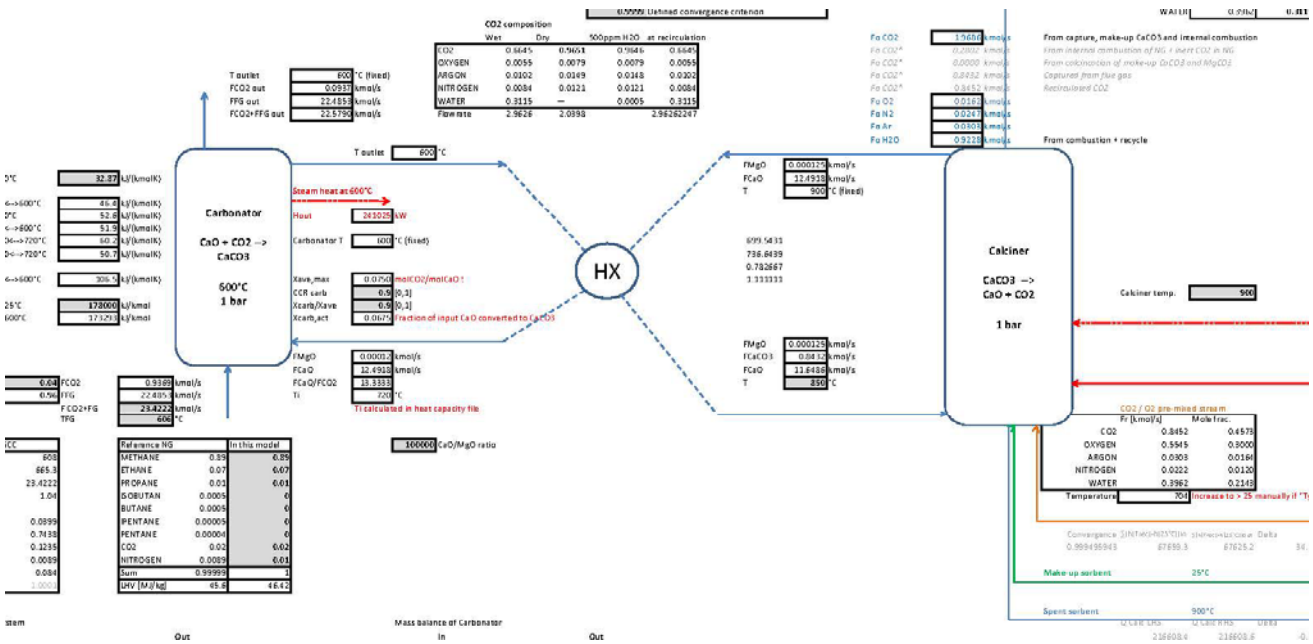

NGCC with Ca-looping CO_2 capture

Parameters for 90% capture rate

- Sorbent
  - Calcite
- Carbonator
  - Cabonation efficiency: 19.9%
  - Carbonation temperature: 600°C
- Calciner
  - Make-up ratio: 0.06
  - Calciner efficiency: 100%
  - Calciner temperature: 950°C
- NGCC, steam cycle and auxiliaries
  - European Benchmarking Task Force documents

Preliminary parameters! These were changed subsequently based on experience and feedback.

NGCC with Ca-looping CO_2 capture

Two power generating units?

- Fuel fed to Calciner: ~38% of total fuel to process
- Power generation from Ca-Looping cycle: ~35% of total power

Sources of CO_2 captured

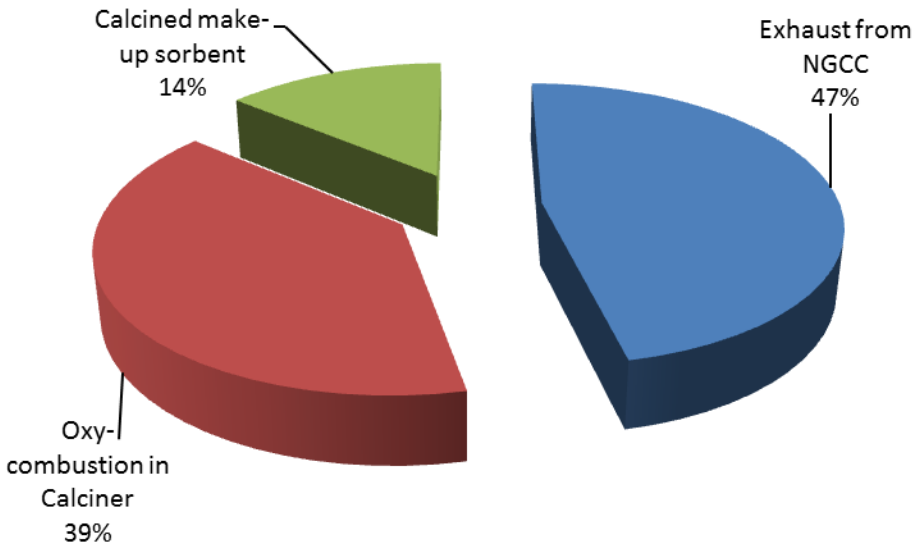

Reference NGCC with and without CO_2 capture

- European Benchmarking Task Force (EBTF) reference cases are used as reference cases in BIGCCS benchmarking work
- EBTF NGCC without capture:
  - Generic F class gas turbine with 38.5% efficiency
  - 3 pressure level steam cycle with reheat
- EBTF NGCC with capture
  - 90% capture ratio
  - MEA post-combustion capture

Reference NGCC with capture

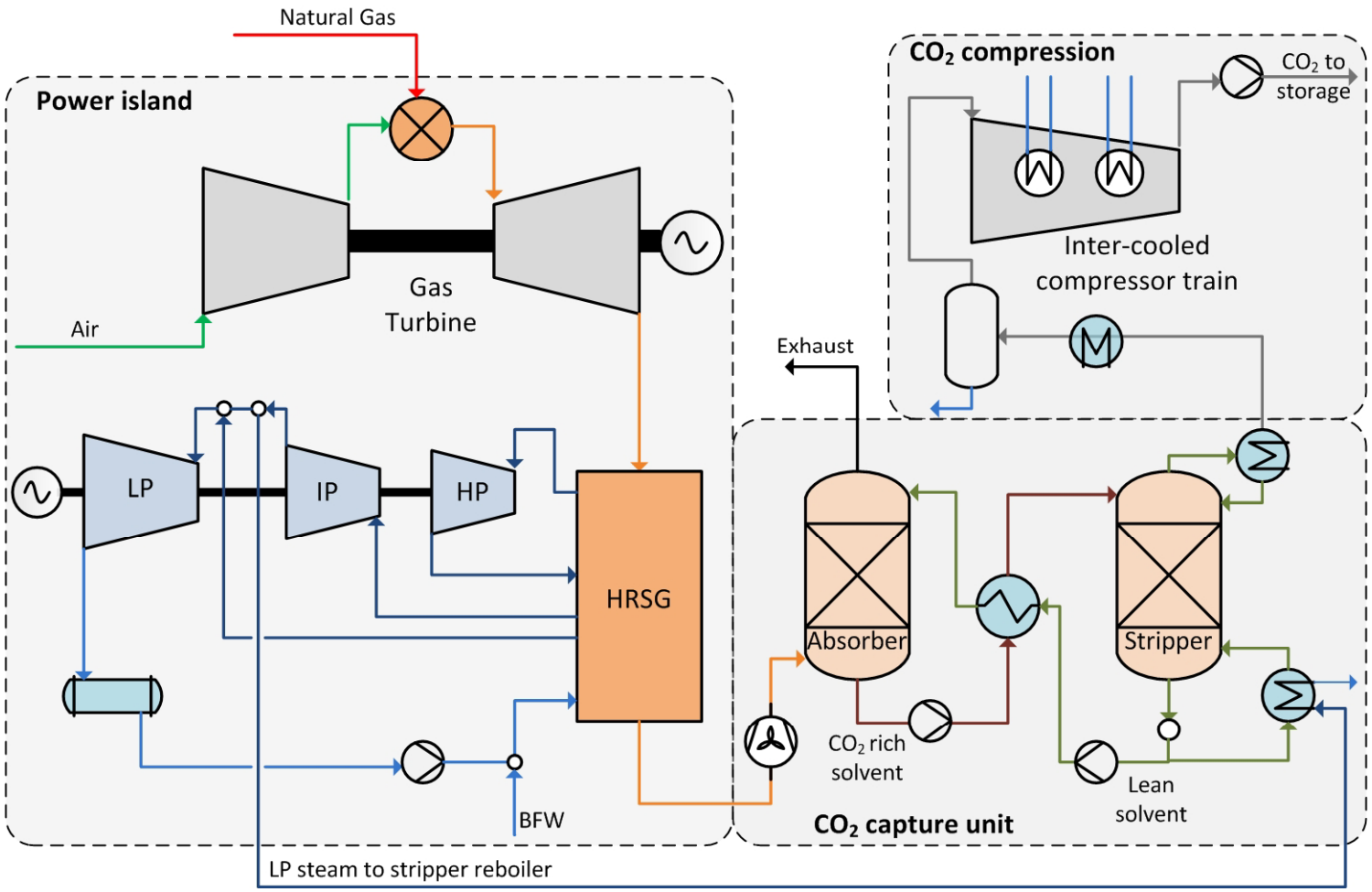

Process Efficiency comparison

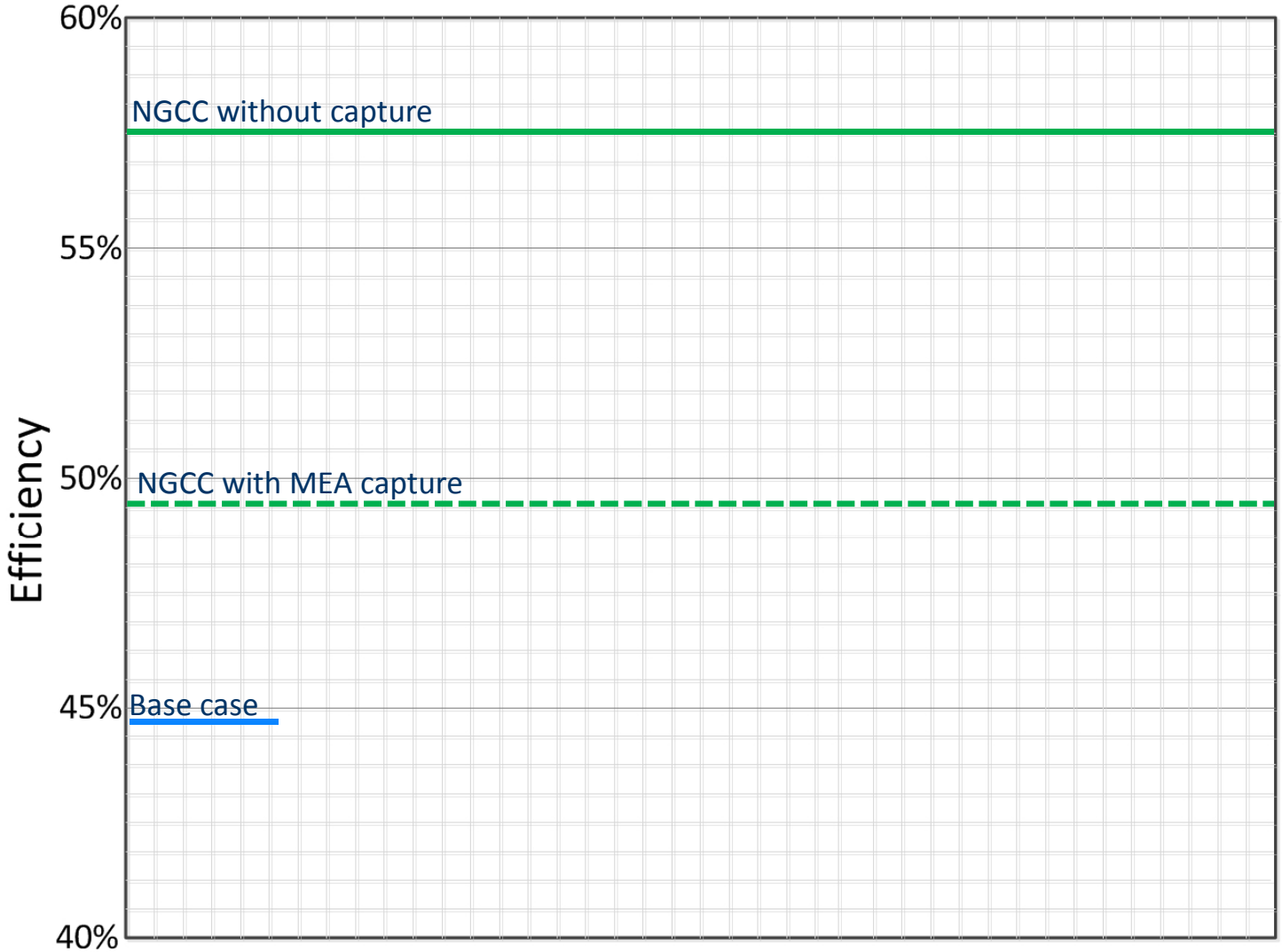

Process improvements

Heat integration

- Recuperator

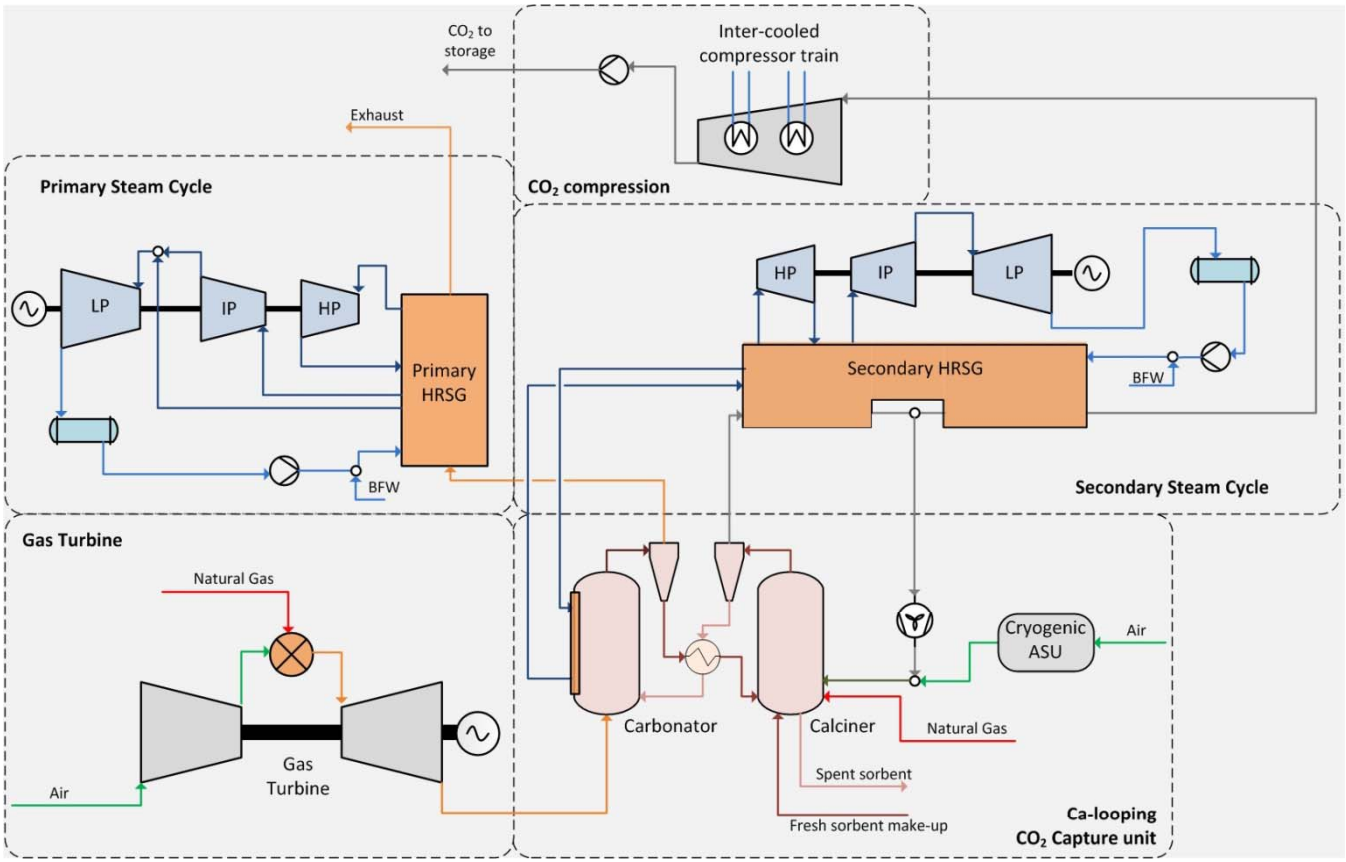

Process improvements

Heat integration

- Recuperator
- Integration of CO_2 compression heat
- Use of advanced steam and super-critical steam cycle for secondary steam cycle

Process Improvements

Steam cycle

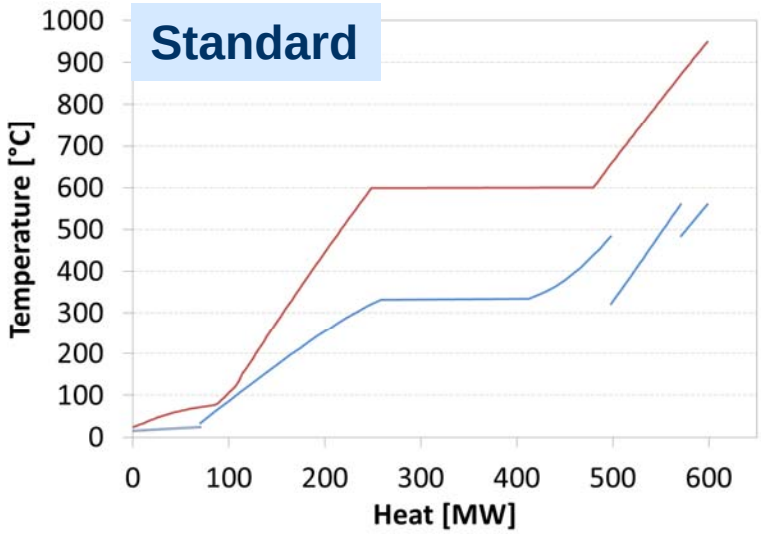

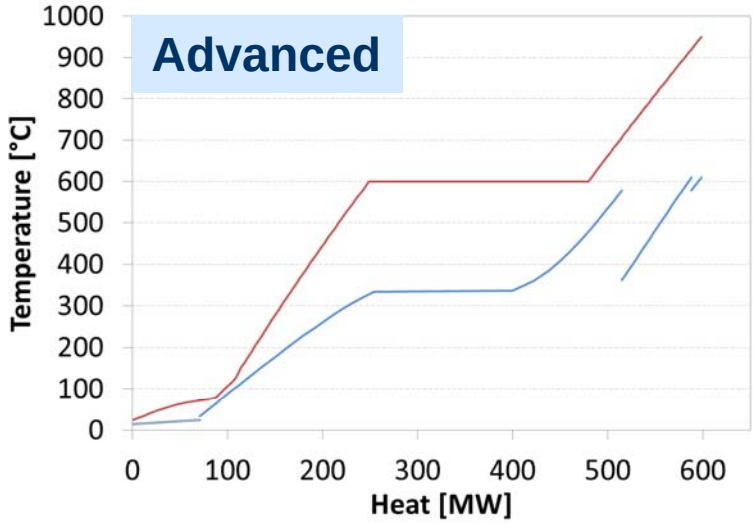

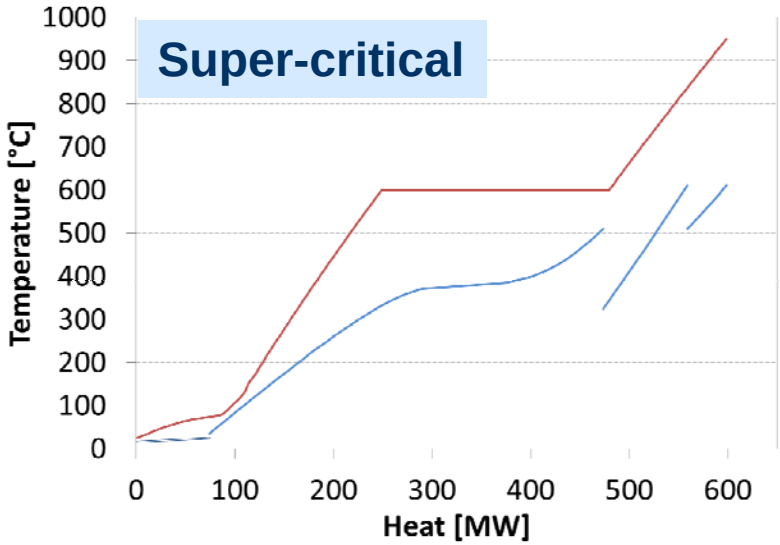

Process improvements

Heat integration

- Recuperator
- Integration of CO_2 compression heat
- Use of advanced steam and super-critical steam cycle for secondary steam cycle
- Hot recycle

Process Improvements

Hot recycle

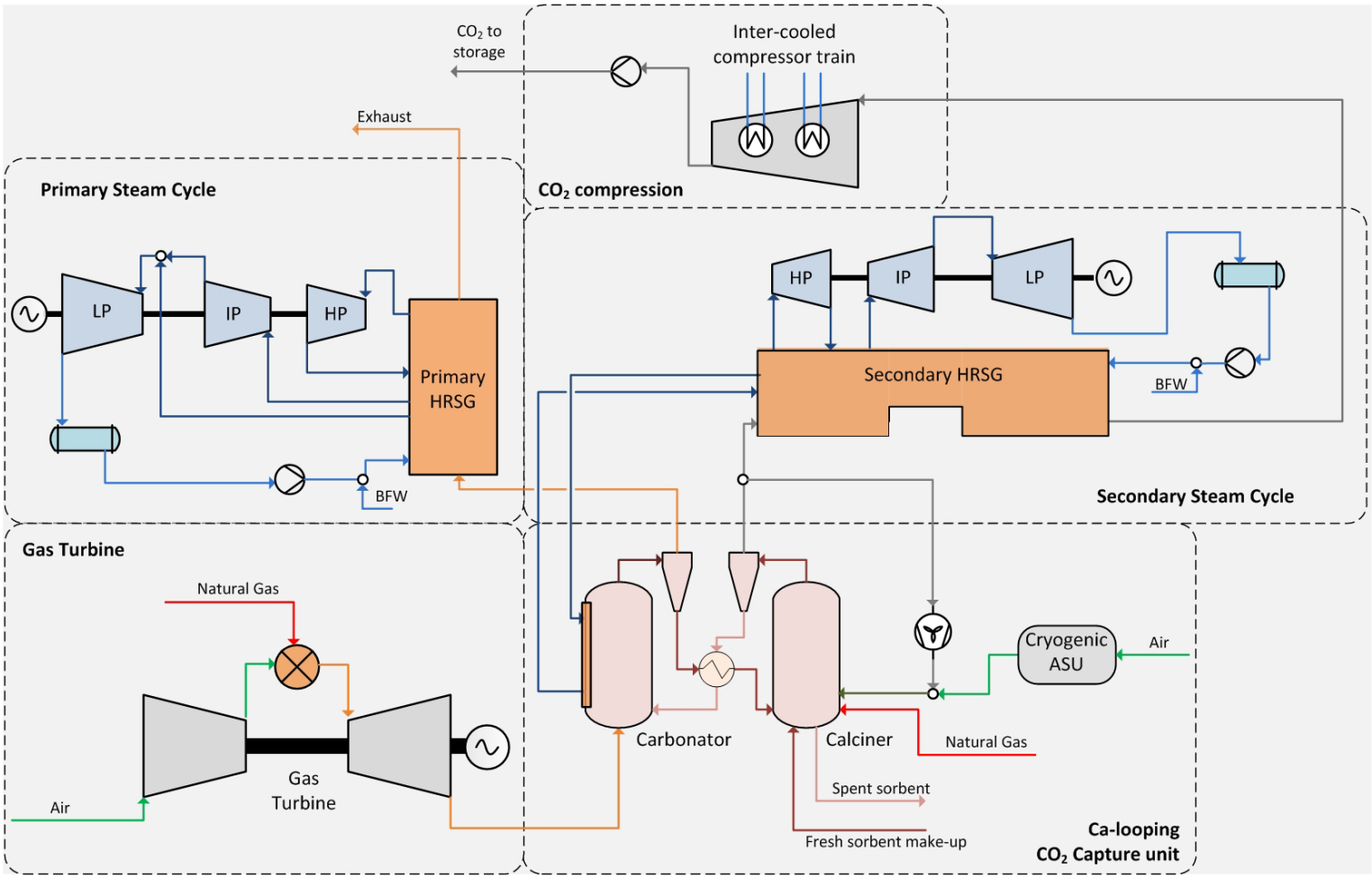

Process Efficiency comparison

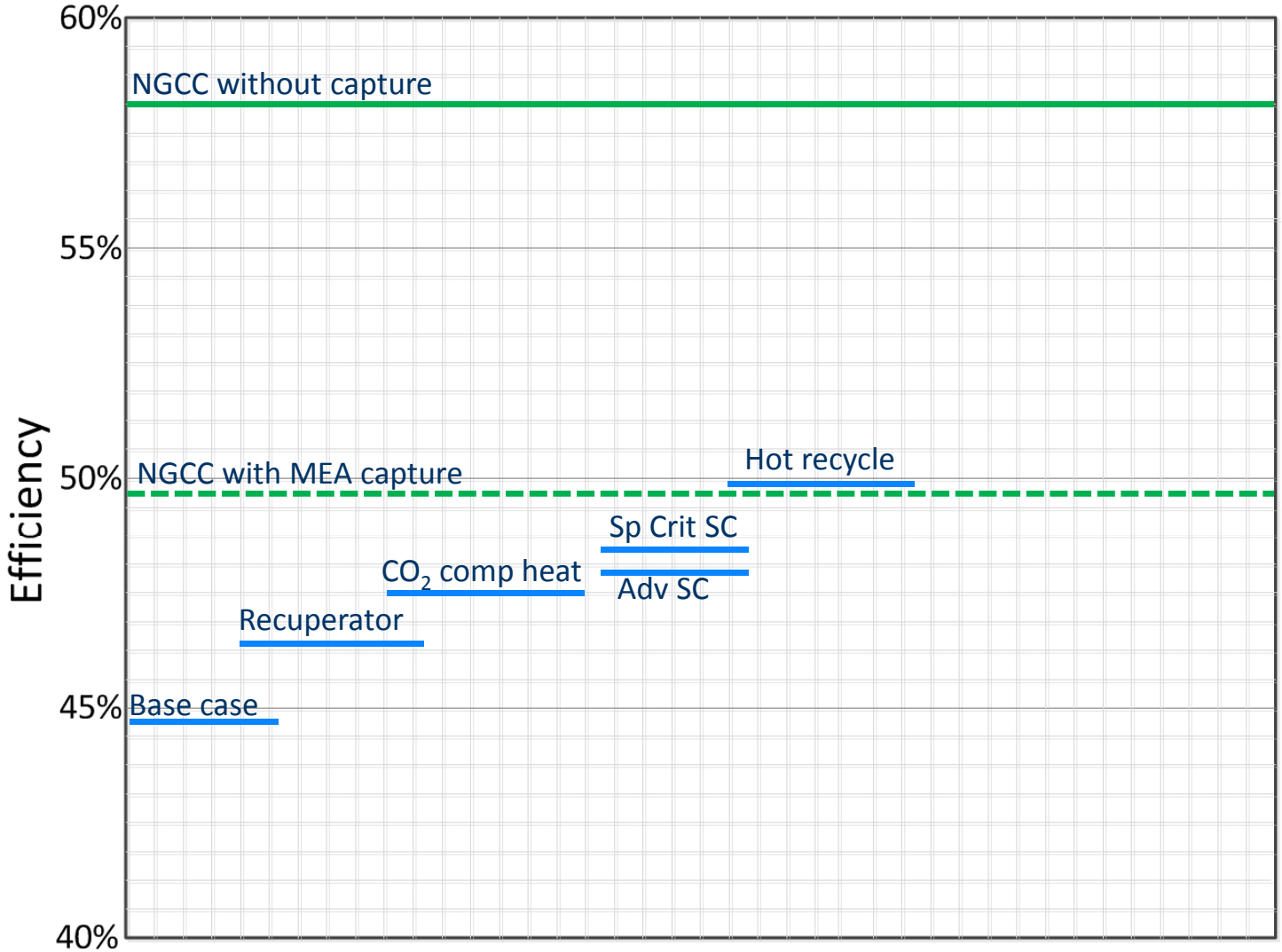

Sorbent properties and modeling

- Performance of the Ca-looping process is dependent on sorbent properties
  - Calciner heat requirement and sorbent make up ratio among others
- Sorbent undergoes decay with each cycle of process causing decrease in sorbtion conversion
- Decay model proposed by Grasa and Abanades(2006) used

$$X_N = \frac{1}{(1 - X_r)^{-1} + k N} + X_r$$

Sorbent properties and modeling

- 4 classes of sorbents
  - Untreated: such as calcite and dolomite
  - Class I sorbents: lifetime of the natural Ca-based minerals improved by promoting the minerals with other elements or by simple processing with other inorganics
  - Class II sorbents: supported Ca-based sorbents prepared by wet impregnation of a calcium containing solutions onto a porous substrate followed by calcination
  - Class III sorbents: the third strategy used is often linked to nano-materials where sorbent nanoparticles of CaO, Li_2O, Na_2O, etc. are stabilised by other nano-sized phases such as ZrO_2, CeO_2, TiO_2, SiO_2, Al_2O_3, etc.

Sorbent properties and modeling

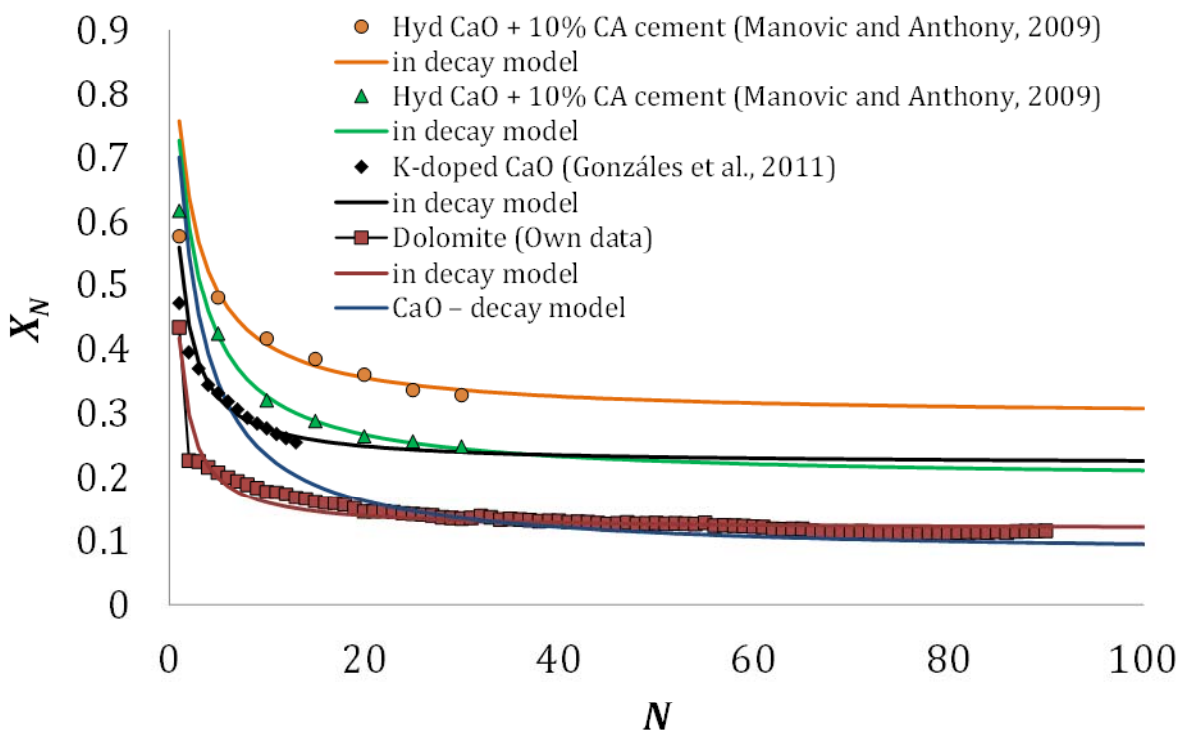

Untreated and Class I sorbents

Sorbent properties and modeling

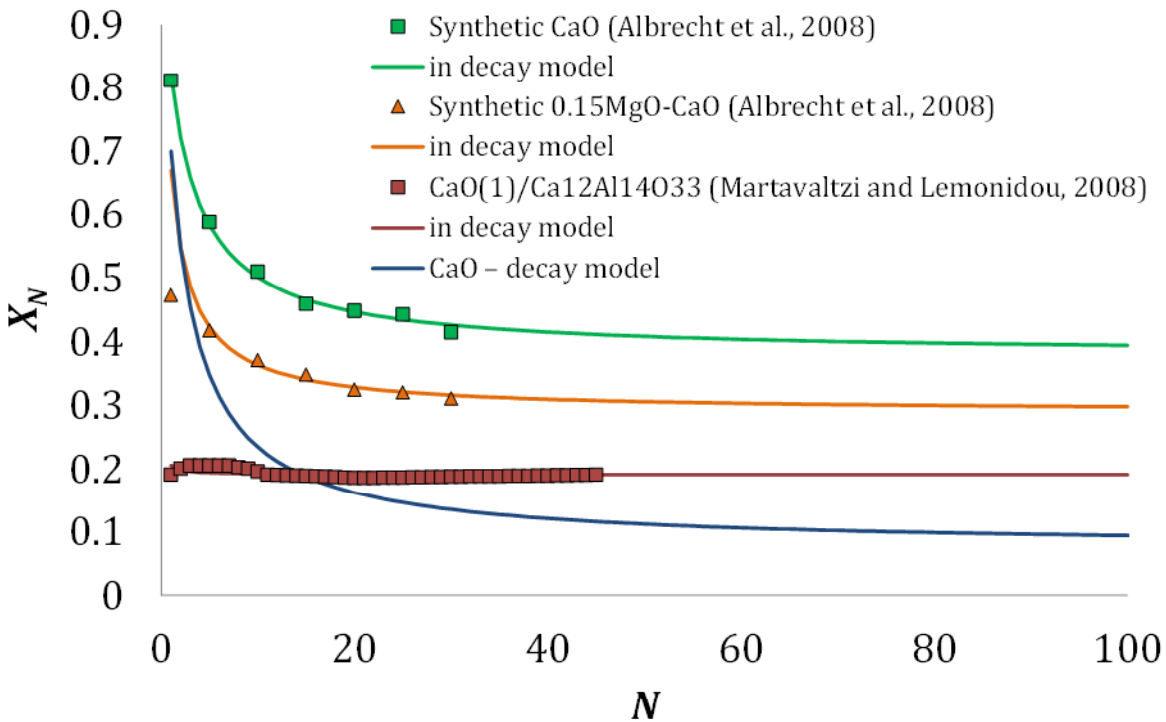

Untreated and Class II sorbents

Effect of sorbent properties on overall system

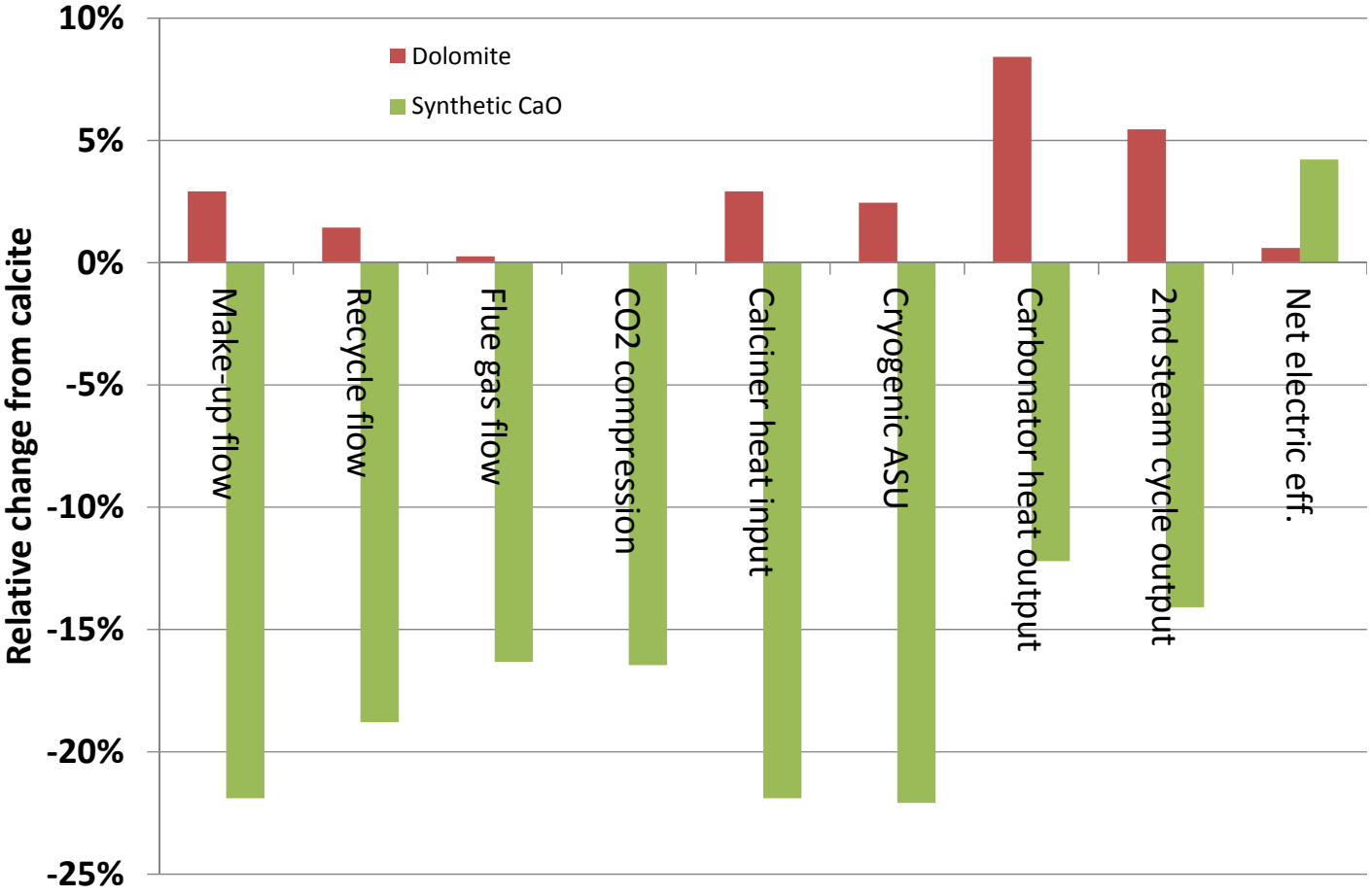

Process Efficiency comparison

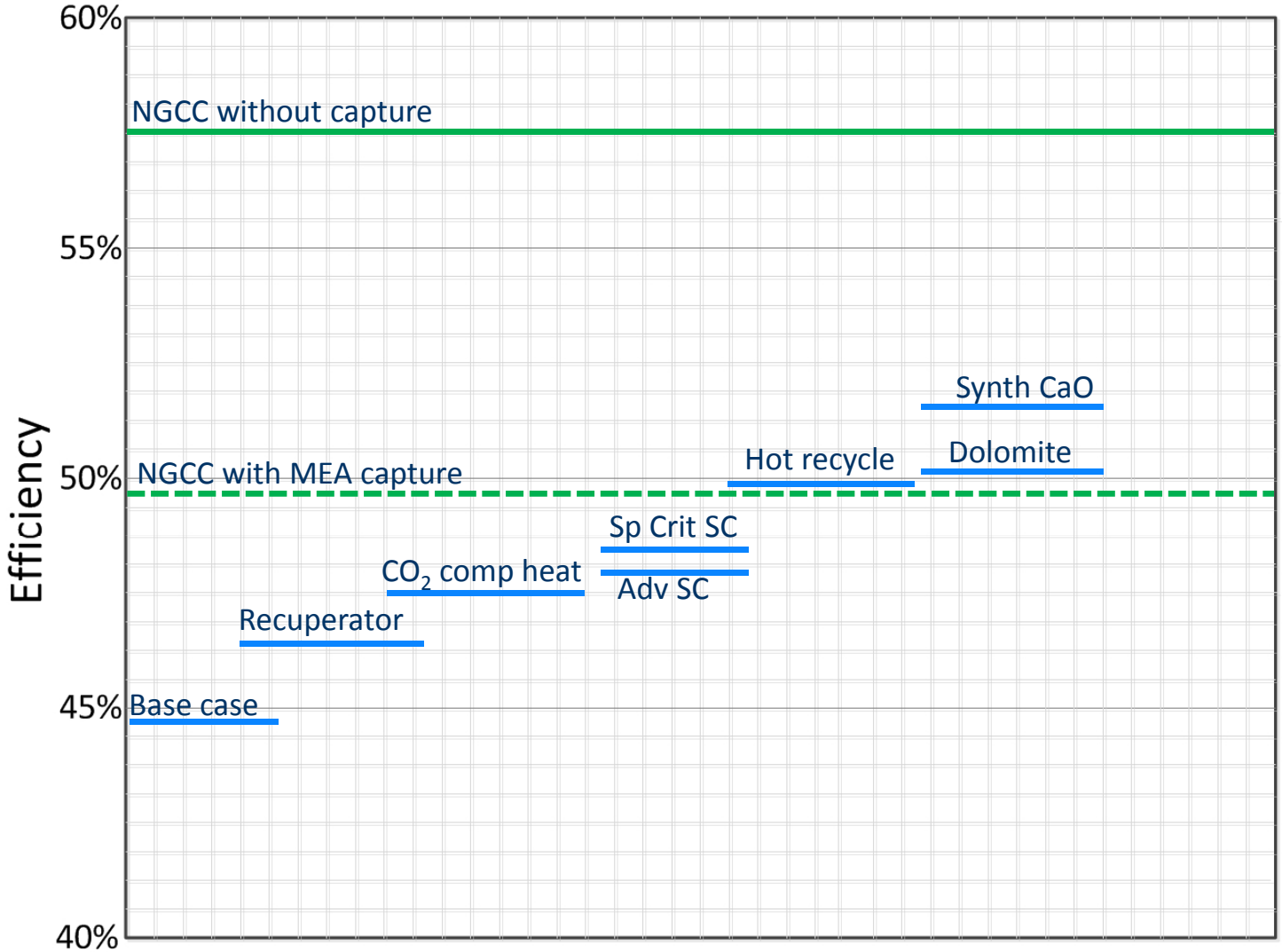

Integration of Oxygen Transport Membranes

- Motivation
  - Cryogenic ASU contributes to ~30% of energy penalty
  - Theoretical separation work for O_2: 49 kWh/ton O_2
  - Separation work in cryogenic ASU: 190-200 kWh/ton O_2

- Oxygen Transport Membranes (OTM)
  - Dense ceramic membranes (metal oxides).
  - Membrane operation based on mixed conduction of ions and electrons.
  - Separates O_2 from air with 100% selectivity.
  - Operating temperature range: 800-1000°C.

- Challenge
  - Proper integration
  - O_2 recovery rate from OTM low (30-60%)

Integration of Oxygen Transport Membranes

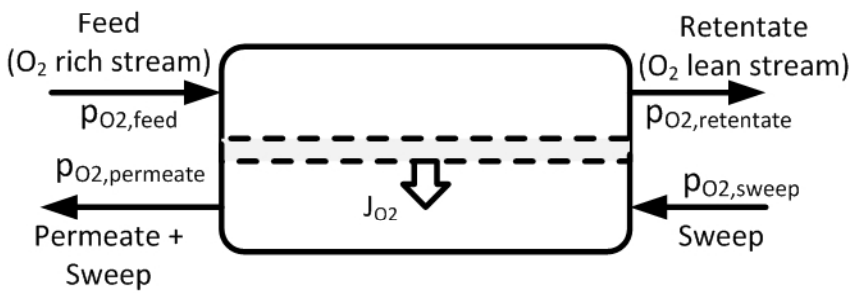

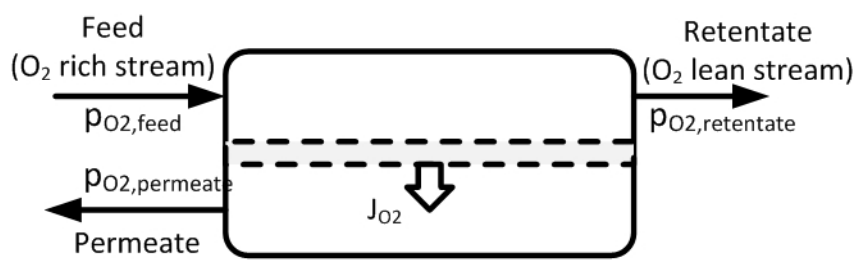

Integration of Oxygen Transport Membranes in Ca-looping cycle

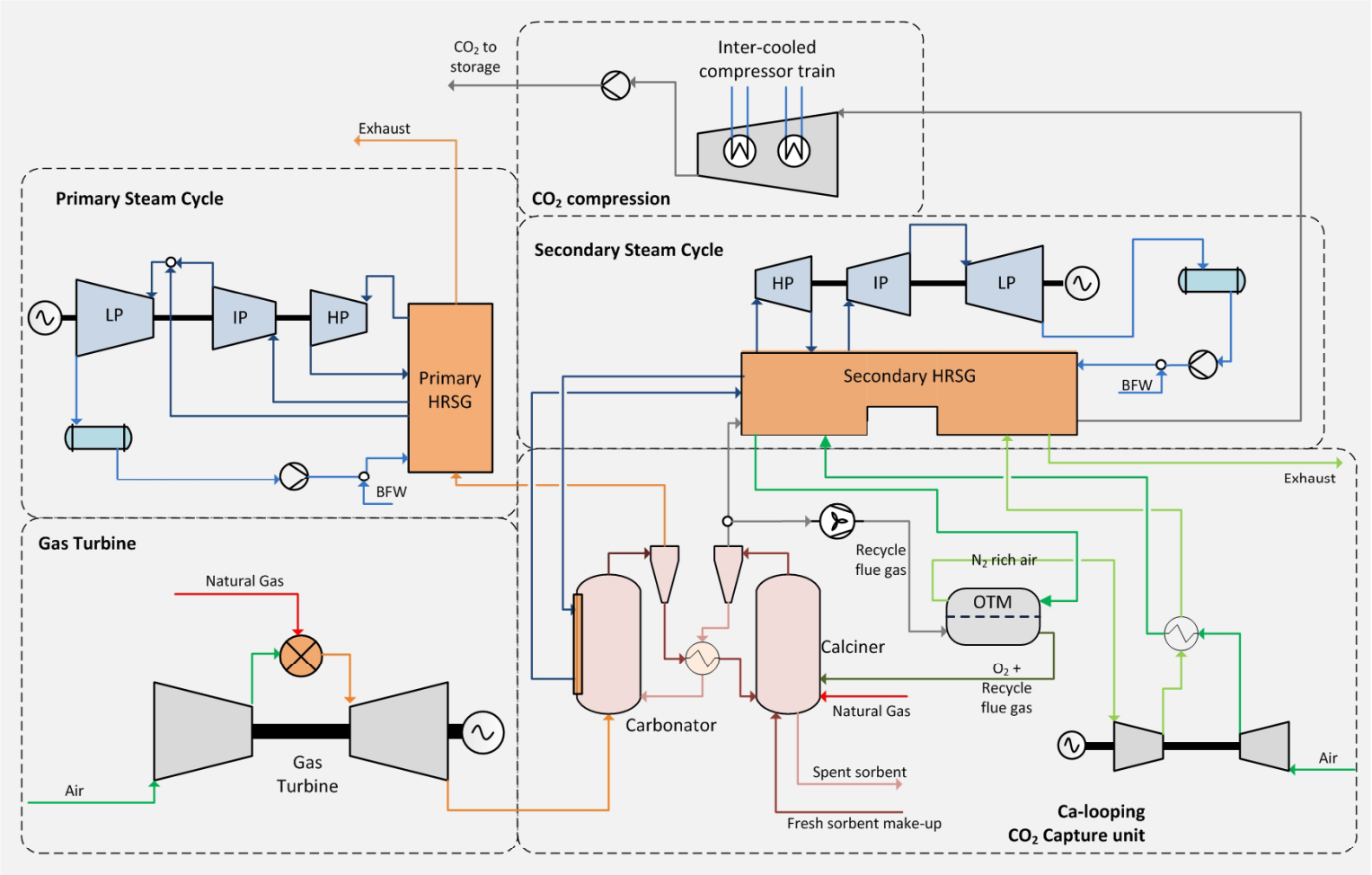

Process Efficiency comparison

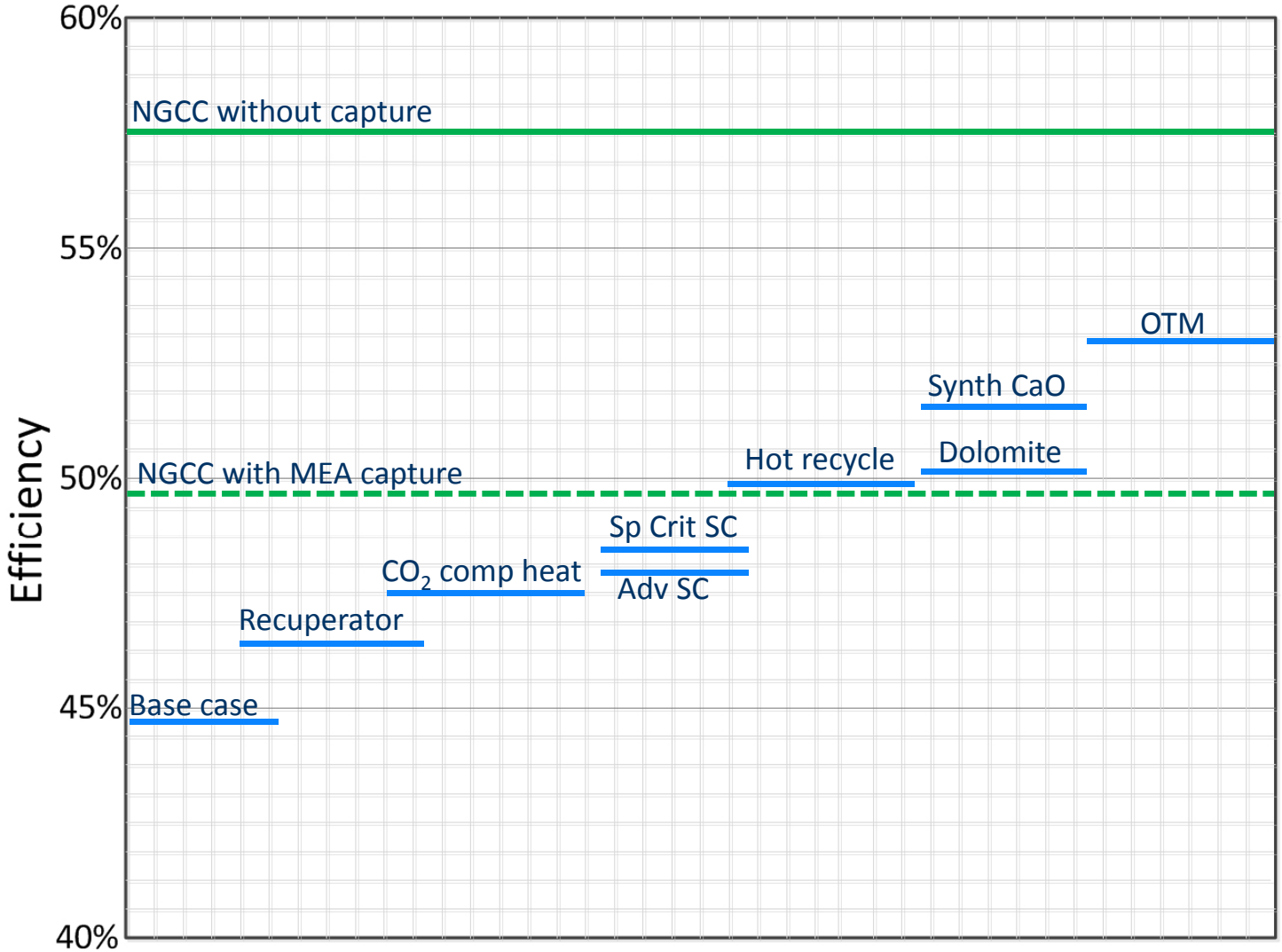

Summary

- Process design of Ca-looping cycle for CO_2 capture from NGCC is an on-going activity in BIGCCS
- The efficiency of the process has been improved by 8.4% points using heat integration, advanced sorbents and integrating OTM in the process
- The Ca-looping process has potential to reduce energy penalty of the capture process
- The systematic procedure also provides pointers for sorbent development by analysing the effect of sorbent properties on the overall process

Further reading

- Berstad, D., Anantharaman, R., & Jordal, K. (2012). Post-combustion CO_2 capture from a natural gas combined cycle by $CaO/CaCO_3$ looping. *International Journal of Greenhouse Gas Control*, *11*, 25–33.

- Berstad, D., Anantharaman, R., Blom, R., Jordal, K. & Arstad, B. NGCC post-combustion CO_2 capture with Ca/Carbonate looping: efficiency dependency on sorbent properties, capture unit performance and process configuration. *International Journal of Greenhouse Gas Control*, **Under revision**

Acknowledgements

This publication has been produced with support from the BIGCCS Centre, performed under the Norwegian research program Centres for Environment-friendly Energy Research (FME). The authors acknowledge the following partners for their contributions: Aker Solutions, ConocoPhillips, Gassco, Shell, Statoil, TOTAL, GDF SUEZ and the Research Council of Norway (193816/S60).