Process Integration: Reduction of CO_2 Emissions and Energy Consumption at BlueScope's Port Kembla Steelworks (PKSW)

Habib Zughbi

IEAGHG/IETS Workshop
5-8 November 2013
Tokyo

BlueScope's global manufacturing footprint at June 2012
(shown by FY2013 reporting)

JV with NSSMC

India (1)
- Metal Coating +250kt
- Painting +150kt
- Lysaght sites 3
- Buildings sites 1

Middle East JV
- Buildings sites 1

Thailand
- Cold Rolling 360kt
- Metal Coating 324kt
- Painting 75kt
- Lysaght sites 3
- Ranbuild outlets
- Buildings sites 1

Malaysia / Singapore / Brunei
- Metal Coating 168kt
- Painting 75kt
- Lysaght sites 6 (4)
- Ranbuild outlet

Indonesia
- Metal Coating 273kt
- Painting 160kt
- Lysaght sites 4
- Ranbuild outlets

Kalama
- Cold Rolling 455kt
- Metal Coating 235kt
- Painting 110kt

China
- Metal Coating 250kt
- Painting 150kt
- Lysaght sites 4
- Buildings sites 3

Vietnam
- Metal Coating 130kt
- Painting 50kt
- Lysaght sites 2
- Ranbuild outlets
- Buildings sites 1

North Star (2)
- Raw Steel 2.3mt
- Hot Rolling 2.1mt

United States
- Buildings sites 8
- ASC Profiles sites 9 (3)

Fairfield
- Painting 110kt

Rancho Cucamonga
- Metal Coating 220kt
- Painting 100kt

Mexico
- Buildings sites 1

Brisbane
- Painting 95kt

Australia
- Distribution sites 61
- Lysaght sites 33
- Service Centres 6
- Solutions (Buildings, Water, Highline, Ranbuild) 9(5)

Sydney
- Painting (1 line) 120kt

Western Port
- Cold Rolling 1.0mt
- Metal Coating (3 lines) 830kt (6)
- Painting (2 lines) 330kt

Port Kembla
- Raw Steel 2.6mt
- Hot Rolling 2.9mt
- Plate 450kt
- Cold Rolling 990kt
- Metal Coating (3 lines) 825kt
- Painting (1 line) 200kt

New Zealand/Pacific Islands
- Iron Sands Mining sites 2
- Raw Steel 615kt
- Hot Rolling 610kt
- Cold Rolling 280kt
- Metal Coating 220kt
- Painting 60kt
- Hollow Sections 45kt
- Lysaght sites 4

New Segment Legend
- Global Building Solutions
- Building Products ASEAN, North America and India
- Coated & Industrial Products Aust
- Building Components & Dist Aust
- New Zealand & Pacific Steel Products
- Hot Rolled Products North America

Notes:

(1) Tata BlueScope Steel is a 50:50 JV between BlueScope Steel and Tata Steel – metallic coating line commenced trials and paint line commenced operations at end of CY2011. Will not be included in NS BlueScope Coated Products JV with NSC
(2) North Star is a 50:50 JV between BlueScope Steel and North Star Steel (subsidiary of Cargill Inc.); BSL equity share 1.0mt
(3) Water sites in the U.S. have been consolidated into ASC sites
(4) Four sites in Malaysia, one in Singapore, one in Brunei
(5) Two manufacturing sites, seven sales
(6) One line has been idled, reducing available capacity by approx 230ktpa

Progress Towards BSL goal of Zero Harm

Lost Time Injury Frequency Rate

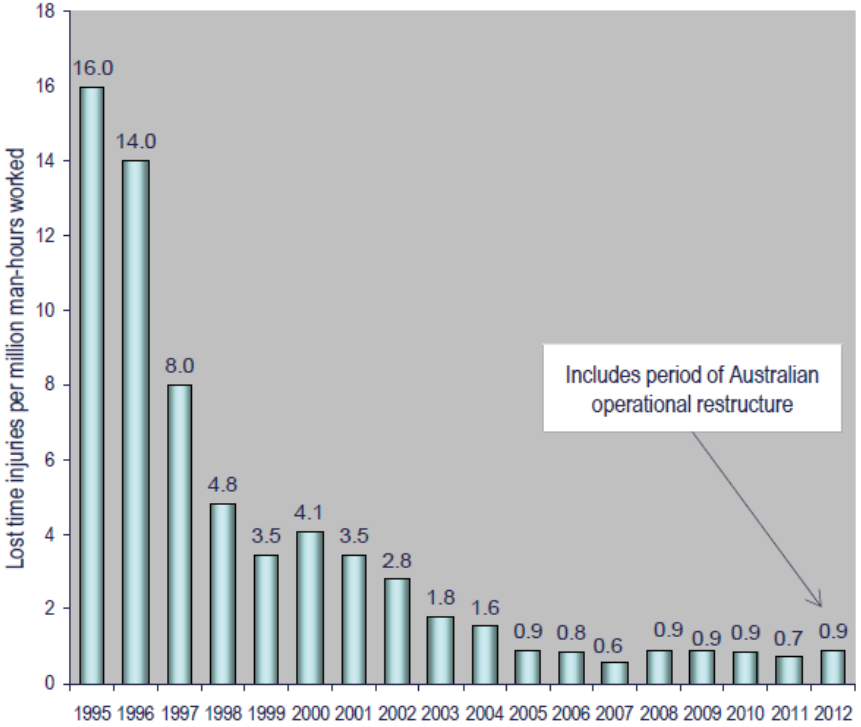

Includes Contractors from 1996
Includes Butler from May 2004
Includes 2007/8 acquisitions

Medically Treated Injury Frequency Rate

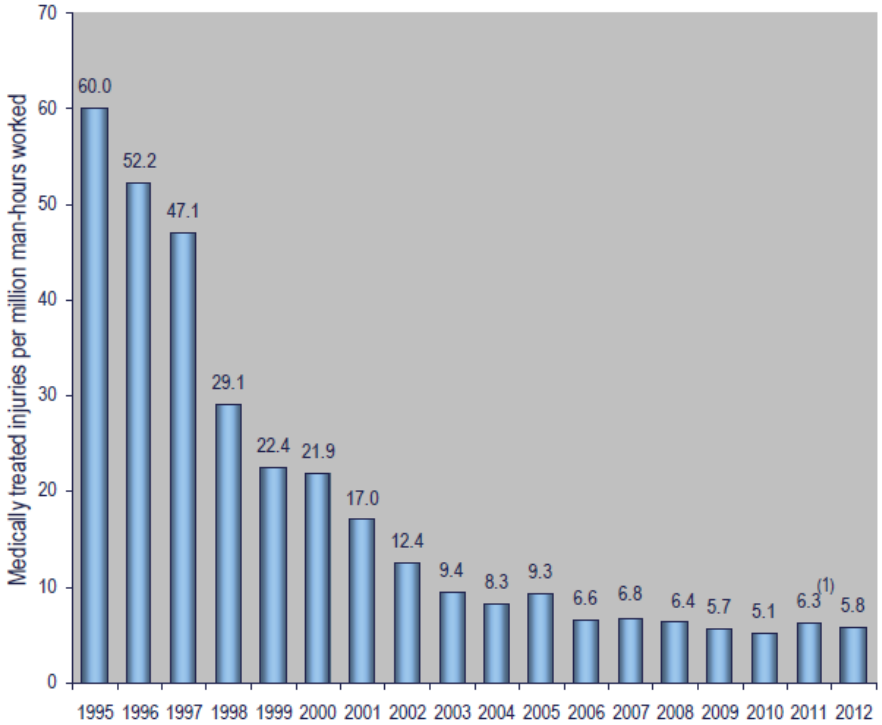

Includes Contractors from 2004
Includes Butler from May 2004
Includes 2007/8 acquisitions

Note: 1 – The MTIFR baseline has been reset from 4.4 to 6.3. This change relates to revised principles that raise the bar on BlueScope's MTI definition

BLUESCOPE

Introduction

- BlueScope and the iron and steelmaking industry have been reducing their energy consumption and emissions of greenhouse gases (GHG) for a number of decades

- Short-term: Transitional measures to implement best practice and incremental decreases
- Long-term, programs like *worldSteel's* **CO_2 Breakthrough** aimed at substantial reduction targets
  - Technologies which aim to reduce CO_2 emissions by 50% (20-50 years)

Introduction 2

- In 2010, Australia introduced a price of $23 /tonne of CO_2 emitted
- In June 2013, it was announced that ETS will start July 1, 2014
- In September 2013, a new Federal Government announced that it will abolish price on C/ETS and will adopt a 'Direct Action Policy".
- This process will start this month in the Parliament
- Assessment of introducing short or medium term improvements, is a complex process, therefore

For a steel plant, assessment of new technologies or alternate operating scenarios should be based on **Process Integration methodologies**, which permit an integrated, inter-departmental approach rather than a localised operation-based approach

BLUESCOPE

Introduction: Manufacturing Plant Mass and Energy

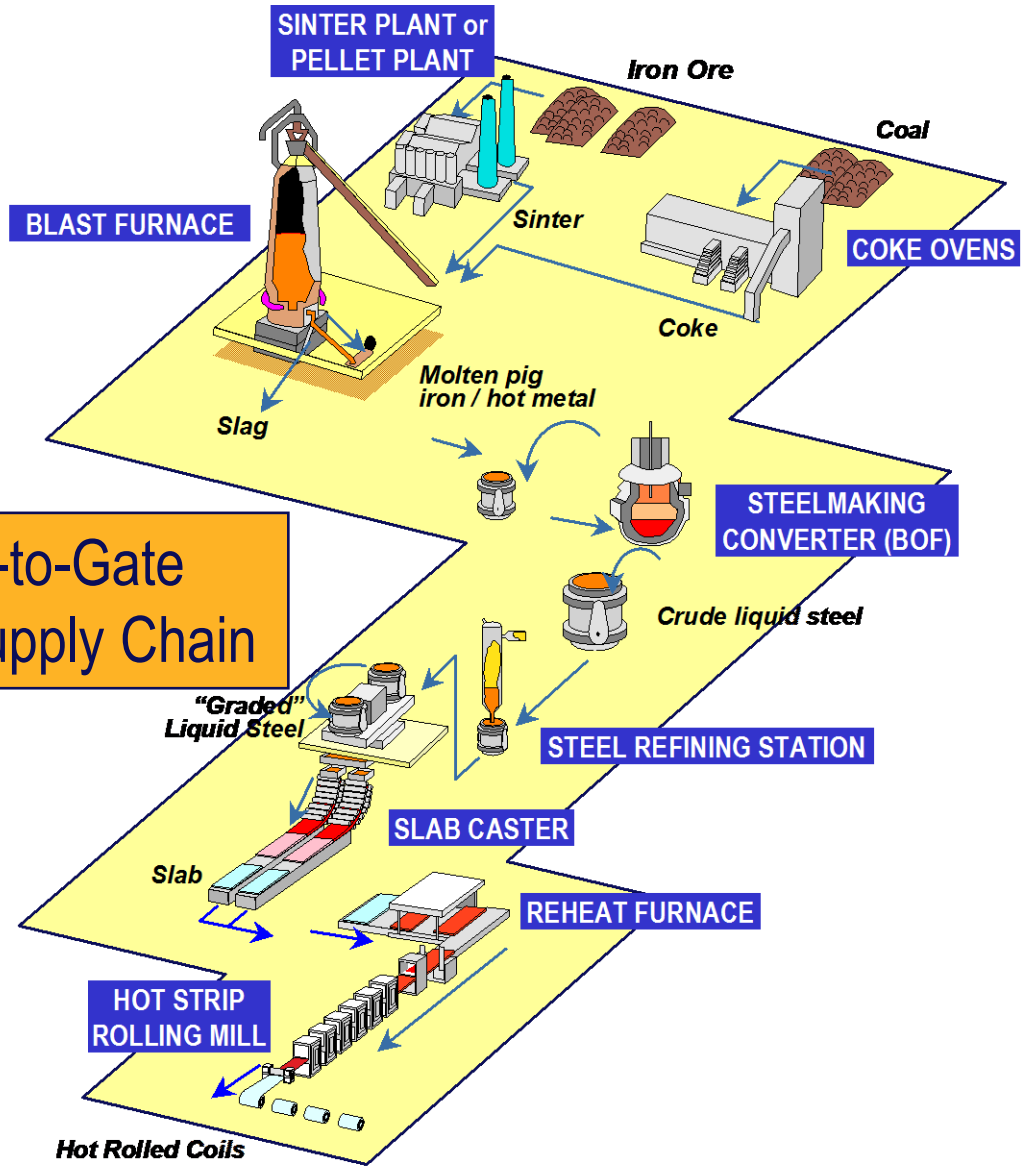

Scope = Gate-to-Gate Manufacturing Supply Chain

ISEEM: Integrated Steelworks Energy and Emissions Model

- ISEEM is a steady state, comprehensive mass and energy balances model of Port Kembla Steelworks
  - Various unit models are coded (e.g. BF, BOS, CO, etc.) and interlinked via distribution systems (COG, BFG, electricity, etc.)
  - Metallurgical models, for example, for the BF and BOS, are based on mass, energy, metallurgical and thermodynamic relationships
  - This is a complex flowsheet problem with many interconnections and recycles
    - > 35,000 equations

BLUESCOPE

ISEEM: Integrated Steelworks Energy and Emissions Model

- The solution of equations is NOT on a unit by unit basis, but a simultaneous one
- Aspentech's flowsheeting package, Aspen Custom Modeller (ACM), is used
- Dynamic aspects dealt with by running the model over a number of time slices within the desired period

BLUESCOPE

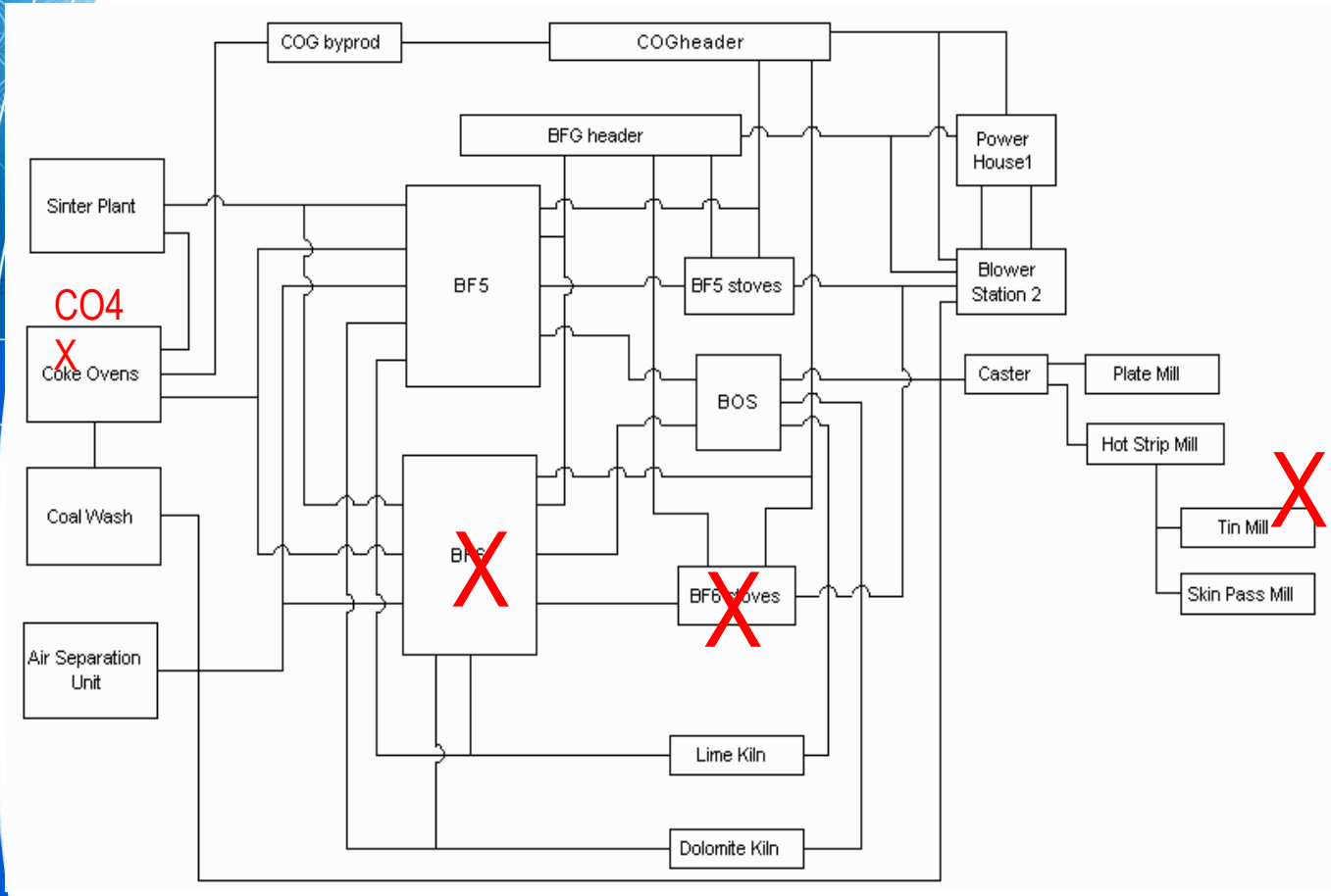

UNITS

- BLAST FURNACE
- BASIC OXYGEN STEELMAKING
- SLAB CASTER
- HOT STRIP MILL
- GAS FIRED BOILER
- COKE OVENS
- BLAST FURNACE STOVES
- ELECTRIC AIR COMPRESSORS
- LIME/DOLOMITE KILN
- TURBO ALTERNATORS
- TURBO BLOWERS
- NITROGEN/OXYGEN/ ARGON PLANT

High level flowsheet configuration, gate-to-gate

BLUESCOPE

ISEEM Application

ISEEM can be used for:

- Understanding the complex process interactions within the steelworks

- Decision support in scenario modelling (PCI, TRT, ferrous dust treatment, etc)

- Determining where energy savings can be achieved (Co-generation plants, etc)

- A basis for future steelworks modelling advances

ISEEM – Graphical User Interface

- An interface written in EXCEL Visual Basic has been developed for ISEEM
- The interface allows easier use of ISEEM by end users (T&E, BFs, etc.)

ISEEM Interface - Input

Example 1 - High level input, likely to be used management

- Data shown is pre-shut down of BF5

- Current data is different

Table 1

Input Data		
Stream Description	**INPUT value**	**Units**
Slab production	245.83	t/h
HSM Coil Production	275.672	t/h
BF5		
Pellet%	26.3	%
Lump%	15.88	%
PCI, kg/thm	111.58	
Hot met. temp.	1505.63	ºC
Slag temp.	1555.63	ºC
SRE	93.6667	
BF6		
Pellet%	26.25	%
Lump%	20.78	%
PCI, kg/thm	149.54	
Hot met. temp.	1501.96	ºC
Slag temp.	1551.96	ºC
SRE	93.24755	
Plate Mill Production	47.77	t/h
Tin Mill Production	31.06	t/h

BLUESCOPE

ISEEM: Output Data

Example 1 - high level output, likely to be used by management

- Other custom made inputs/outputs are available for other units, e.g. BFs, BOS, etc.

Table 2: CO2 emissions from major process units, credits and net total

Results - CO2 Emissions		
Stream Description	Result	Units
Boiler 21 CO2 emissions		t/h
Boiler 22 CO2 emissions		t/h
Boiler 23 CO2 emissions		t/h
Boiler 24 CO2 emissions		t/h
Boiler 25 CO2 emissions		t/h
Total Boilers CO2 emissions		**Mt/y**
Sinter plant CO2 emissions		t/h
Waste Gas Cleaning Plant		t/h
Total Sinter Plant CO2 emissions		**Mt/y**
Coke oven 4 CO2 emissions		t/h
Coke oven 5 CO2 emissions		t/h
Coke oven 6 CO2 emissions		t/h
Coke oven 7a CO2 emissions		t/h
COV-byproducts CO2 emissions		t/h
Total Coke Ovens CO2 emissions		**Mt/y**
BOS		t/h
Steel processing CO2 emissions		t/h
Total Steelmaking CO2 emissions		**Mt/y**
Plate mill CO2 emissions		t/h
Hot strip mill CO2 emissions		t/h
Lime kiln CO2 emissions		t/h
Dolomite kiln CO2 emissions		t/h
Total Mills and Kilns CO2 emissions		**Mt/y**
BF5 stoves CO2 emissions		t/h
BF6 stoves CO2 emissions		t/h
Total Stoves CO2 emissions		**Mt/y**
Bleeding of BFG and COG		t/h
***Total CO2 emissions (Excluding elec. & credits)**		**t/h**
Electricity (net, excluding intern. generated)		t-eq/h
Credit - BTX		t/h
Credit - TAR		t/h
Credit - export coke		t/h
PKSW CO2 emissions per year		**Mt/y**
PKSW CO2 emissions per tonne		**t-CO2/t-Steel**

Plant Energy Balance

Energy Balance Summary

Total Cokemaking Energy Input [GJ]		Total Cokemaking Energy Output [GJ]	
Electricity		Coke	
Steam		COG	
Natural Gas		By-prod (BTX and Tar)	
BFG			
COG			
Dry clean coal			
Total Energy		Net consumption	

Sinter Plant Energy Input [GJ]		Sinter Plant Energy Output [GJ]	
Electricity			
COG			
Coke			
Total Energy		Net consumption	0

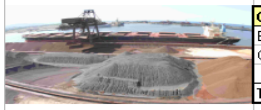

Ore Preperation Energy Input [GJ]		Ore Preperation Energy Output [GJ]	
Electricity			
COG			
Total Energy		Net consumption	0

Total Boiler Energy Input [GJ]		Total Boiler Energy Output [GJ]	
Electricity		Steam	
Natural Gas			
BFG			
COG			
Total Energy		Net consumption	

Summary [GJ]	ISEEM	Plant
Electricity (net)		
PCI Coal		
Natural Gas		
Dry Clean Coal		
Oil		
BTX & Tar		
Coke export		
Net energy		

Total Ironmaking Energy Input [GJ]		Total Ironmaking Energy Output [GJ]	
Electricity		BFG	-22,988,794
Steam		Prod. Electricity	-153,132
Natural Gas			
COG			
Coke			
PCI Coal			
Total Energy	0	Net consumption	-23,141,926

Steelmaking Energy Input [GJ]		Steelmaking Energy Output [GJ]	
Electricity			
Steam			
Natural Gas			
COG			
Total Energy		Net energy cons.	0

Plate Mill Energy Input [GJ]		Plate Mill Energy Output [GJ]	
Electricity			
Steam			
COG			
Total Energy		Net consumption	0

Hot Strip Mill Energy Input [GJ]		Hot Strip Mill Energy Output [GJ]	
Electricity			
Natural Gas			
BFG			
COG			
Total Energy		Net consumption	0

Slab Production vs. Relative CO_2 Emissions

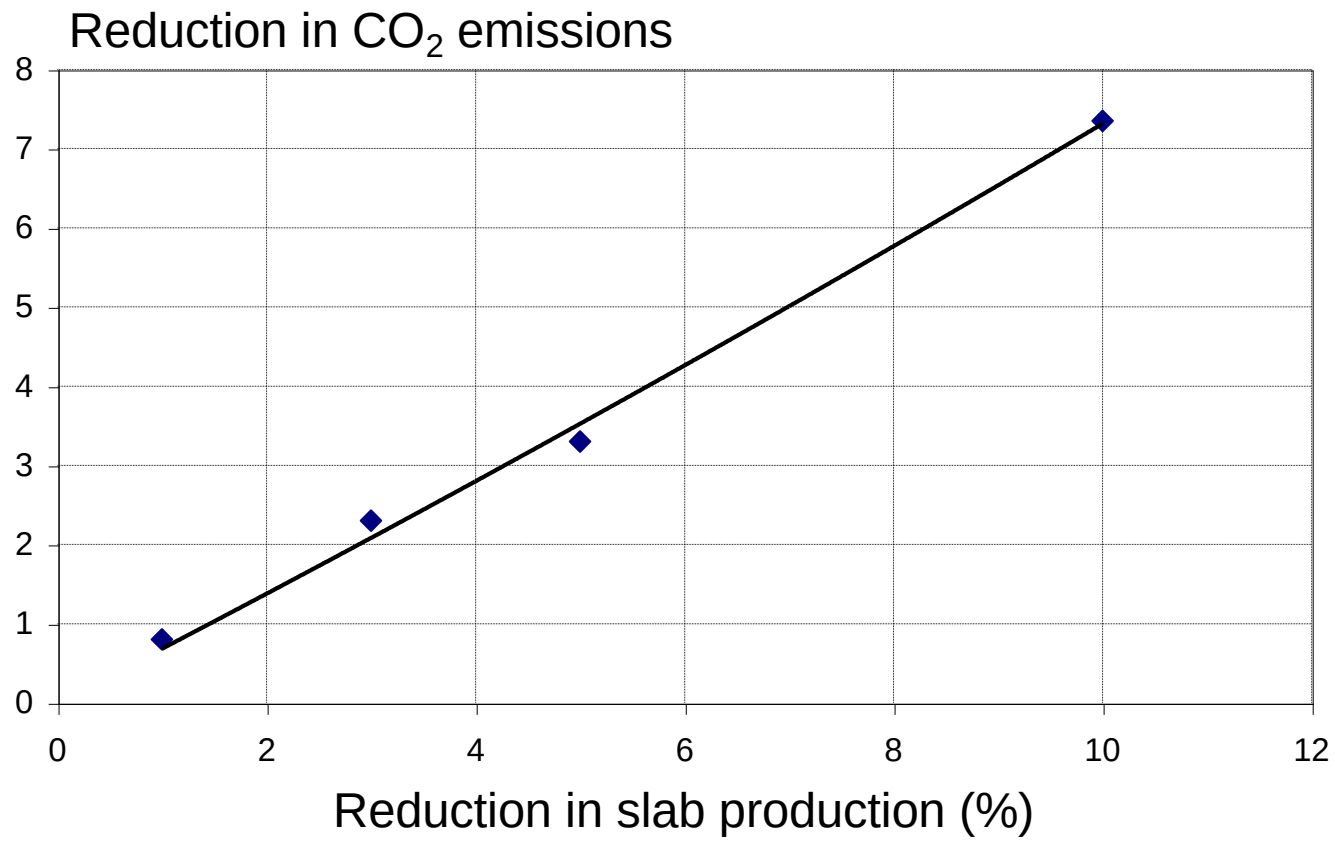

CO_2 Emissions vs Rate of PCI

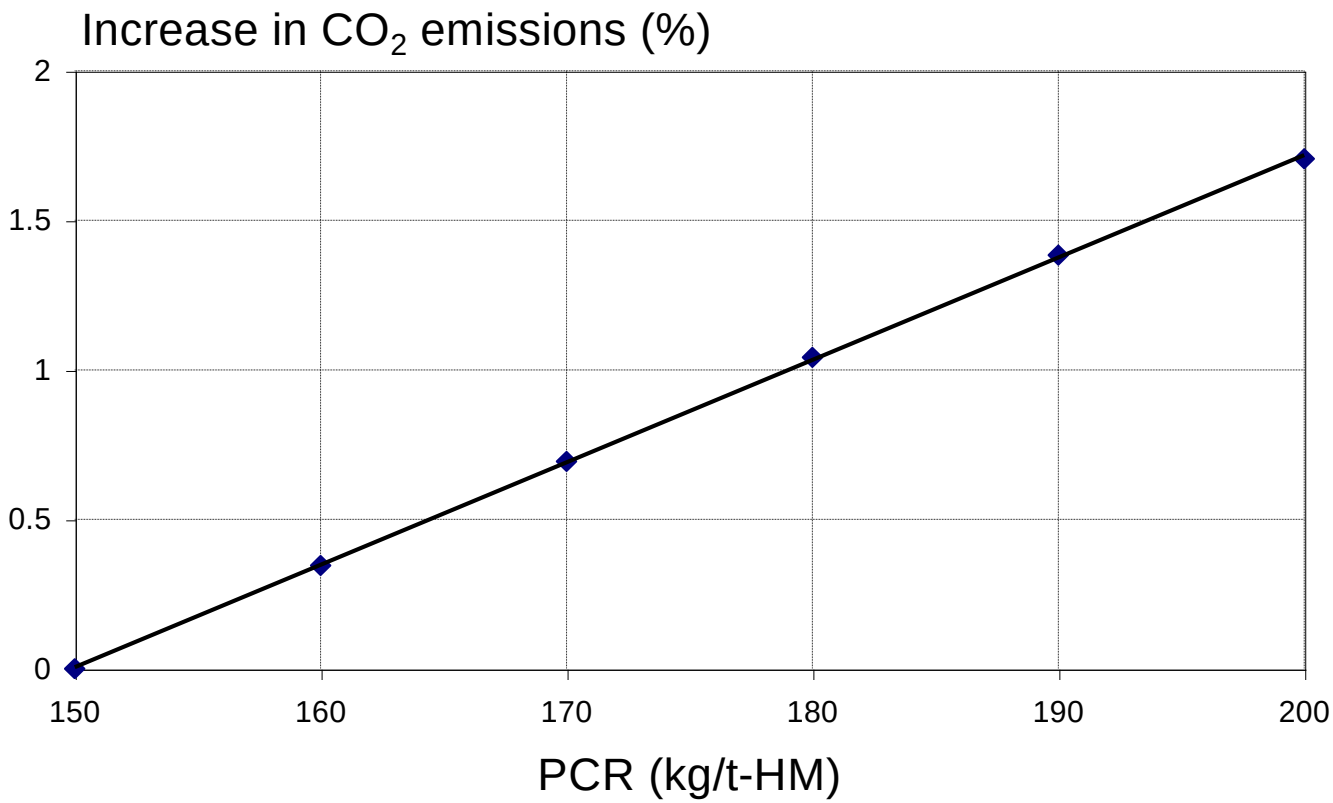

-The way the problem is constrained is important

- Keeping AFT fixed or free makes a big difference

ISEEM Results Vs PKSW Reported Results

- Overall, results show good agreement
- Model can still be improved in many localised areas
- Some differences are still within 5%
- Ways of constraining ISEEM may need to be modified

17

Relative Emission Contributions of all Major Units

.Major User	Relative %	Cumulative %
BF #6	25%	25%
BF #5	23%	48%
Sinter Plant	8%	56%
Battery 6	6%	62%
Battery 7	7%	69%
BFStove # 6	5%	74%
Hot Strip Mill	5%	79%
BFStove # 5	5%	84%
Battery 4	4%	89%
Battery 5	4%	93%
Lime kiln + Dol. Kiln	2%	95%
Plate Mill	1%	96%
Boiler 25	1%	97%
Boiler 24	1%	98%
Boiler 21	1%	99%
Boiler 22	1%	100%

BLUESCOPE

Target Setting and reduction Studies

<u>The objectives of the study were to:</u>

- Part I: Assess the capability of BlueScope to reduce GHG emissions
- Part II: Set a target for future GHG emissions, by:
  - Assessing the current status of GHG and energy emission for BSL.
  - The emissions inventory was audited and its accuracy was assessed. This formed a base level for comparison against suitable benchmarks.

19

Target Setting Study

- **<u>Part 1 provided:</u>**

1. An estimate of energy consumptions and GHG emissions for a baseline period

2. An Energy Audit. The audit was taken to the level of the lowest practical user, and included all major energy sources and users.

Target Setting Study

- **Part 2**

➢ Detailed benchmarking and target setting exercise for a selected sample of business units.

➢ A sample of Business Units was used to determine a suitable target for BSL.

➢ The sample was representative of the BSL's complete operations

➢ This included iron making, steelmaking, rolling, metal coating, steel processing and logistics.

➢ All selected units were analysed for its energy use, and normalised for their equipment configuration and raw materials.

Scope Of Study

Plant emissions were placed into three scopes. These are:

Scope 1: <u>Direct emissions</u> from site consumed by BSL. Examples include coal, coke and natural gas.

Scope 2: <u>Indirect energy emissions</u> on site. Examples include electricity and compressed air purchased and consumed by BSL.

Scope 3. All emissions beyond control of plant, but linked to operations. Examples: contracted gases (not generated on site) such as O_2 and N_2.

Target Study: Scenarios Modelled

- BF
  - TRT
  - Top Gas Pressure
  - Coal Moisture
  - Blast Temperature
- CO
  - Coal drying
  - Improved efficiencies
- Post Re-line
- Post Sinter Plant Upgrade
- Best of Class
- Best of Similar Class

Comparison of CO_2 Total Emissions per Tonne of Steel for Various Scenarios

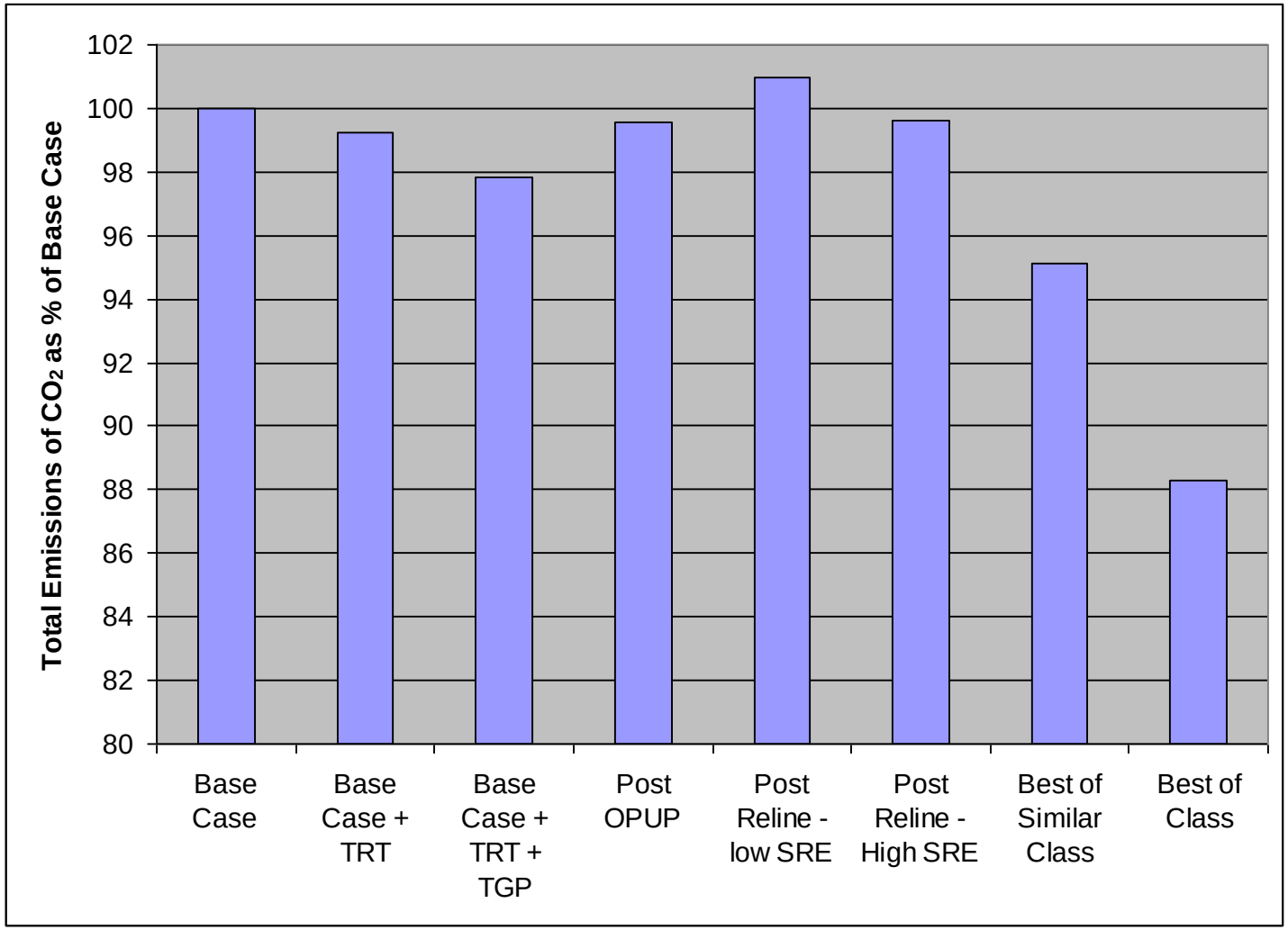

Comparison of Total Energy Consumption for Various Scenarios

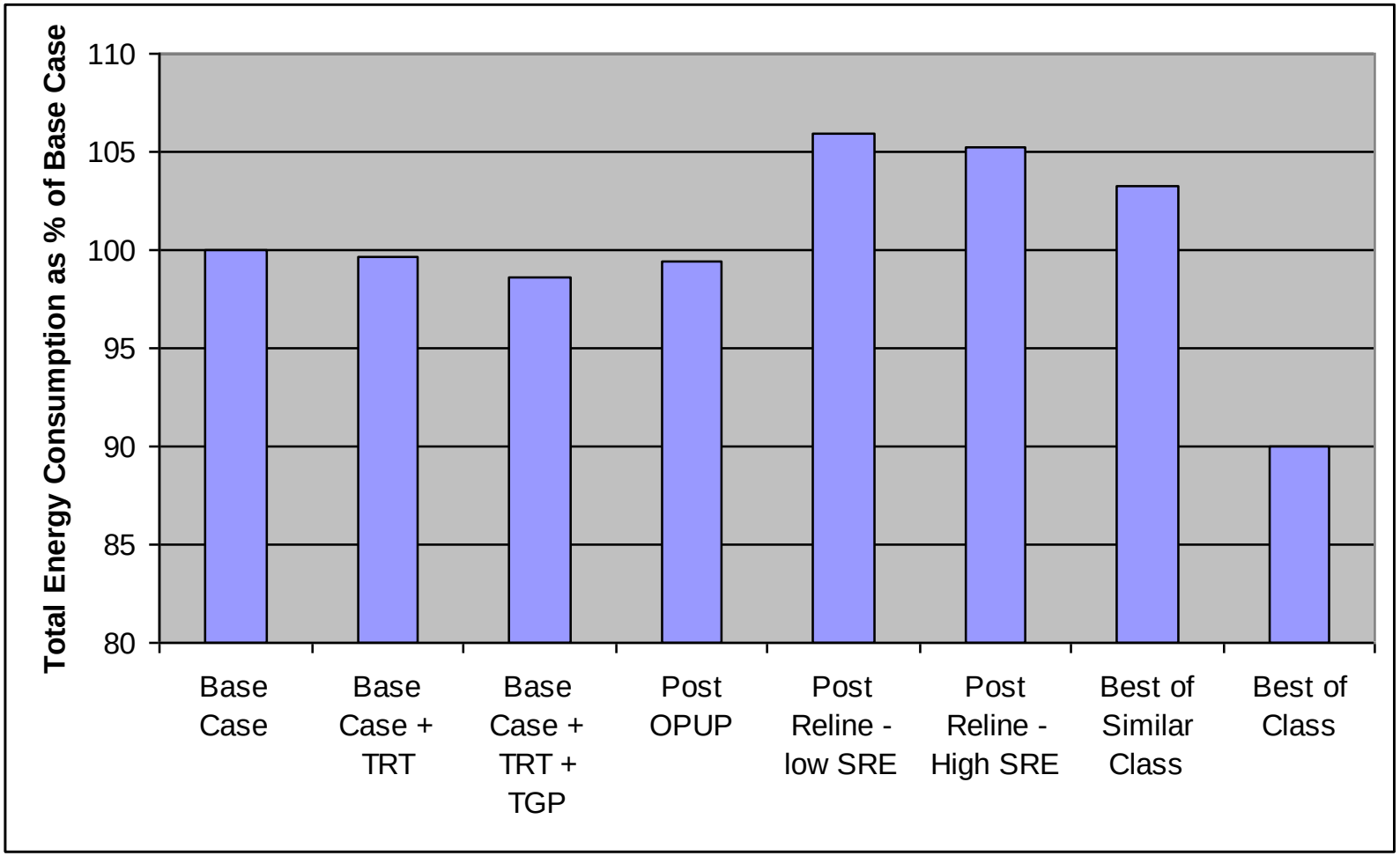

Water Fall Chart

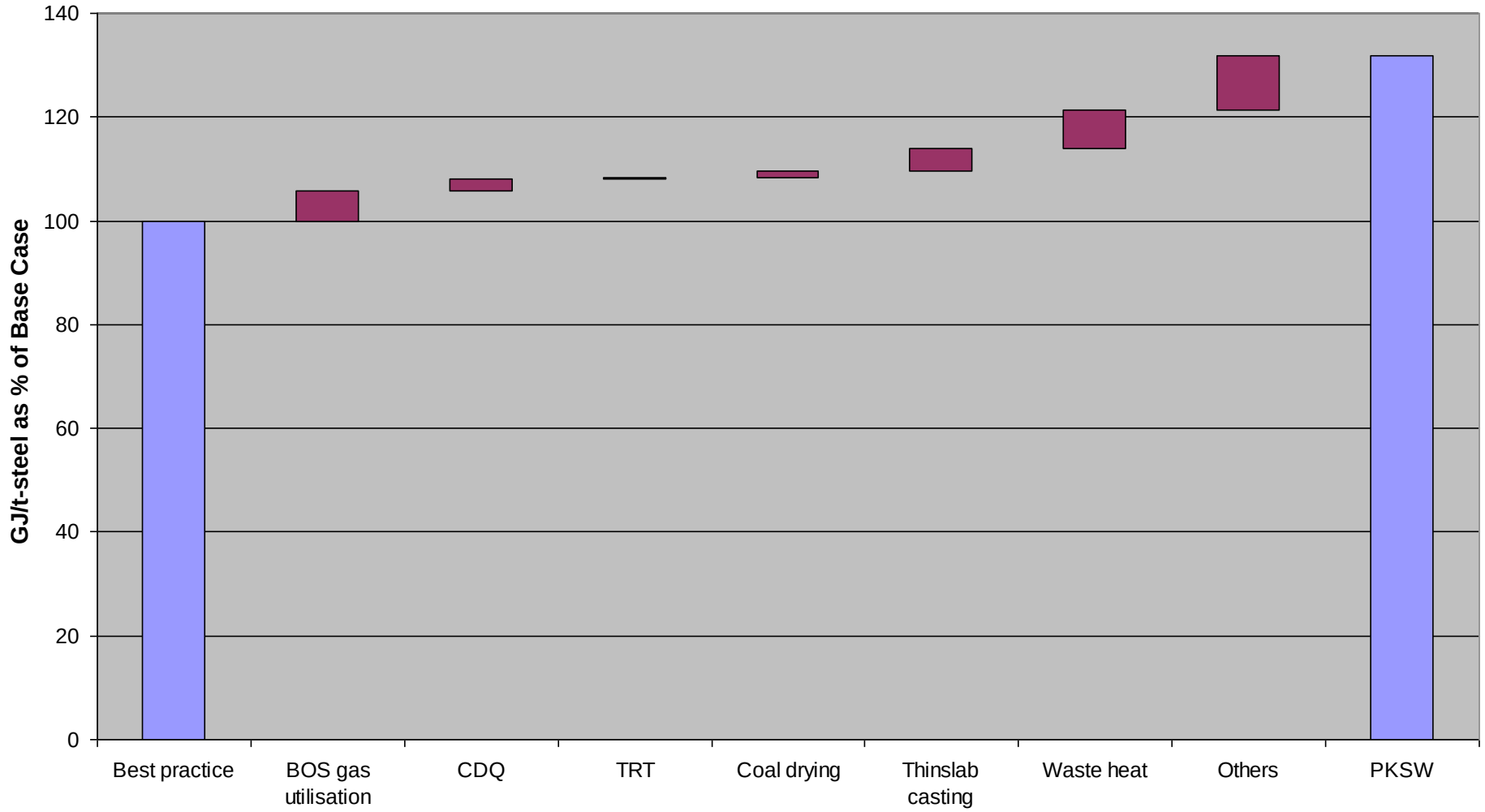

Port Kembla Steelworks New Configuration

- In Oct 2011
- BSL took a decision to:
  - shut down one of its two BFs
  - Cut down its production by half
  - Shut down CO4
- Changes were also made to power and steam generating facilities

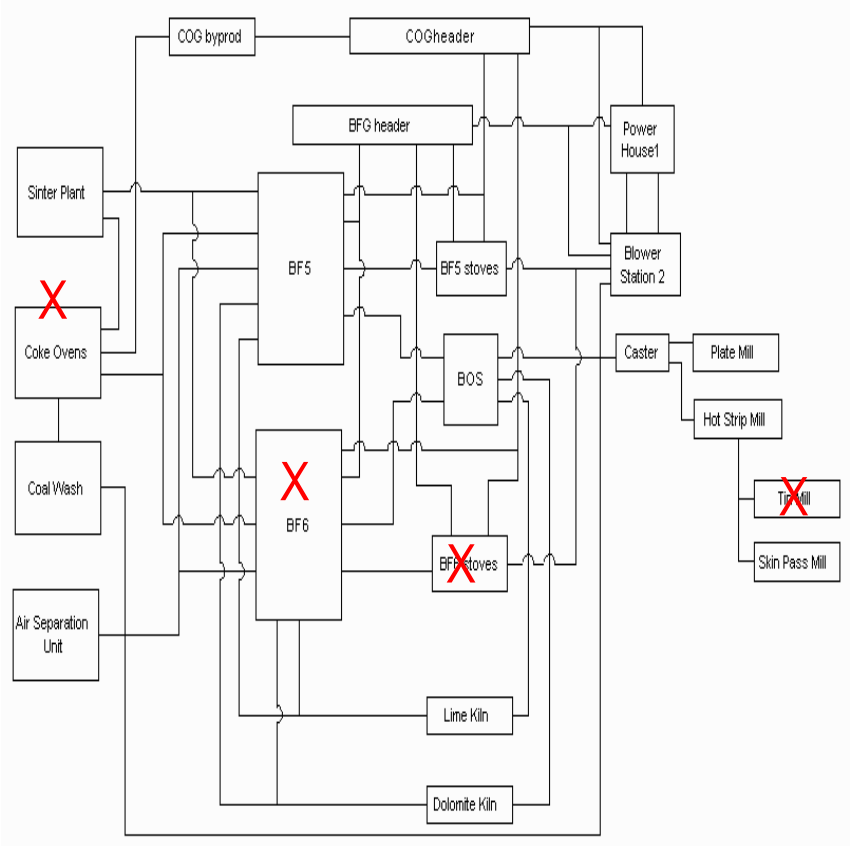

Requirements of a PI Model

- Process Integration (IETS first w/shop)
  - Methodology
  - Tools
  - Data

- Requirements of a PI model
  - Flexible
  - Robust
  - Realistic
  - Has optimising capability

ISEEM – PKSW New Configuration

Introducing major changes raises new questions about the model:

- Model is configured in a particular way
- Tin Mill was successfully deleted
- Boilers deleted successfully
- Coke oven also deleted
- Other peripheral units
- BF6 was more difficult but deleted

This raises other questions:

- Constraining the model – backward or forward calculations?
- Sequential or simultaneous convergence?
- Constraining a sub model: BF minimum and maximum production rates? Model vs reality

BLUESCOPE

More Questions

- Which platform to use?
  - Aspen Custom Modeller (equation solver)
  - AspenPlus or AspenHysys (process simulation package – friendly but not to I&SM industry)
  - Excel
  - Other

Conclusions

1. Process integration model is used extensively to evaluate a wide range of scenarios, including:
   - Changes in raw materials
   - Operation conditions
   - Energy consumption and CO_2 emissions reduction measures
   - Shutting down units

2. As PI is becoming more commonly used, it will be useful to re-visit the basics:
   - Methodology
   - Tools & platforms
   - Optimisation
   - Data

3. This forum is an excellent starting point

BLUESCOPE

Thank You

Questions?