2nd Oxyfuel Combustion Conference

Experience of Operating a Small Pilot-Scale Oxy-Fuel CFB Test Rig

Tomasz Czakiert[a,*], Marcin Klajny[b], Waldemar Muskala[a], Grzegorz Krawczyk[a], Pawel Borecki[a], Michal Gandor[a], Sylwia Jankowska[a], Wojciech Nowak[a]

[a]*Czestochowa University of Technology, Faculty of Environmental Protection and Engineering, Department of Heating, Ventilation and Air Protection, Dabrowskiego 73, Czestochowa 42-200, Poland*
[b]*Foster Wheeler Energia Polska Sp. z o.o., Staszica 31, Sosnowiec 41-200, Poland*

Keywords: Oxy-Fuel; CFB; combustion; pilot-scale

1. Introduction

Czestochowa University of Technology - CzUT (as Coordinator) in association with other universities (i.e. Silesian University of Technology, Wroclaw University of Technology), R&D Centers (i.e. Institute of Power Engineering - IEn, Institute for Chemical Processing of Coal - IChPW) and companies remarkable active on power generation national market (i.e. Foster Wheeler Energia Polska Ltd, Tauron Group PKE S.A., PGE Turow Power Plant S.A. and Eurol Innovative Technology Solutions Ltd) started a 5-year project "Advanced Technologies for Energy Generation: Oxy-combustion technology for PC and FBC boilers with CO_2 capture" [*http://www.is.pcz.czest.pl/strategiczny/*] (Agreement No. SP/E/2/66420/10), in May 2010. The project of a total budget of ca. $ 25 million is funded by the National Centre for Research & Development in Poland as well as supported by power industry.

The core of the project is based on three different oxy-fuel combustion facilities in a small pilot-scale, i.e. Oxy-Fuel ACFB unit, Oxy-Fuel PCFB unit and Oxy-PC firing unit, operated at CzUT, IChPW and IEn, respectively. The range of work that is scheduled for the Oxy-Fuel CFB atmospheric facility covers the investigations under various operating conditions (i.e. oxygen concentration, excess oxygen, gas staging, oxygen staging, rank of fuel etc.). The aim of the work is to provide a wide-range operation data to deepen understanding of oxy-fuel combustion process and to extent modeling capabilities under those conditions. Hence, the air-firing tests that are shown below are to be a reference point for further comparison.

2. Experimental

The $0.1MW_{th}$ CFB test rig [*Czakiert et al., Fuel Processing Technology 91, 2010*] has been modified to be ready for run in an oxy-fuel regime, which means elevated partial pressure of oxygen in a gaseous atmosphere of O_2/CO_2 (Fig. 1). At this stage, CO_2 is supplied from gas cylinders instead of flue gas recirculation.

* Corresponding author. Tel.: +48-34-325-0945 ; fax: +48-34-325-0933 .
E-mail address: tczakiert@is.pcz.czest.pl .

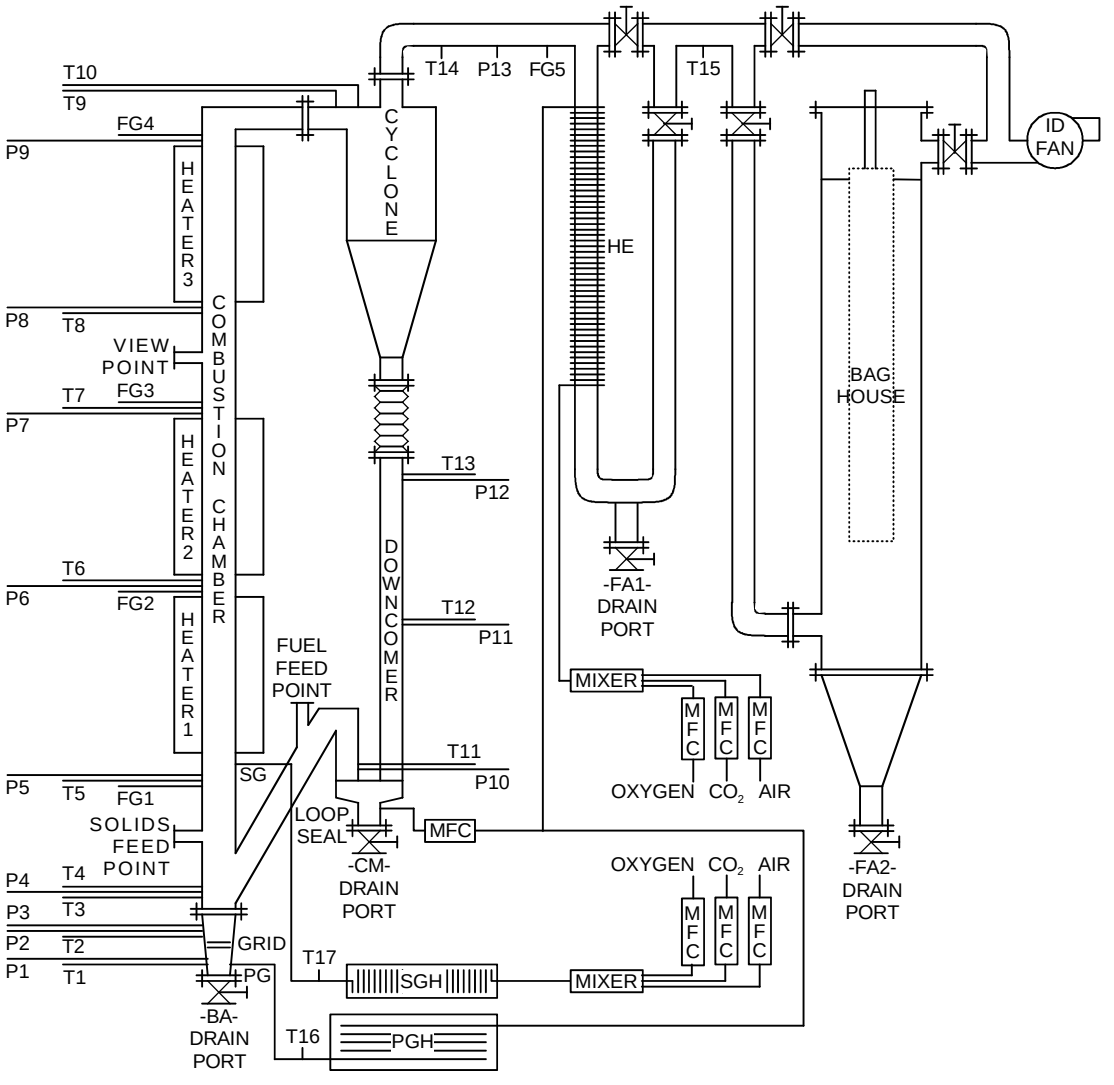

Fig. 1. 0.1MW$_{th}$ Oxy-Fuel CFB test rig.

Round sand of d_p=0-1000·10^{-6}m in size and $d_{3,2}$=224·10^{-6}m was used as start-up bed material. Total mass of circulating solids was ca. m_{bm}=8kg. For the initial tests, air was used as fluidizing gas. Total air flux was ca. F_a=21·3600^{-1}m^{3}s^{-1} STP (including air to loopseal and air to fuel feeder) and PG/SG ratio was 70/30. The superficial gas velocity was v=1.85ms^{-1} and v=2.70ms^{-1} in the bottom section (below SG level) with a dense phase and in the upper section (above SG level) with a dilute phase, respectively. The excess oxygen was kept between 1.1-1.2. Lignite of d_p=0-2500·10^{-6}m in size and $d_{3,2}$=337·10^{-6}m was used as fuel. The fuel flux was ca. F_f=11·3600^{-1}kgs^{-1}. The temperature in the combustion chamber ranged ca. from 1095K to 1120K on average and the pressure drop in the combustion chamber was kept at the level of 2500Pa. Sampling frequency for temperature and pressure was 1Hz. Measurement time was established at 3600s and starts after stable operating conditions in the combustor are achieved, which means bed replacement as well.

3. Results & Conclusions

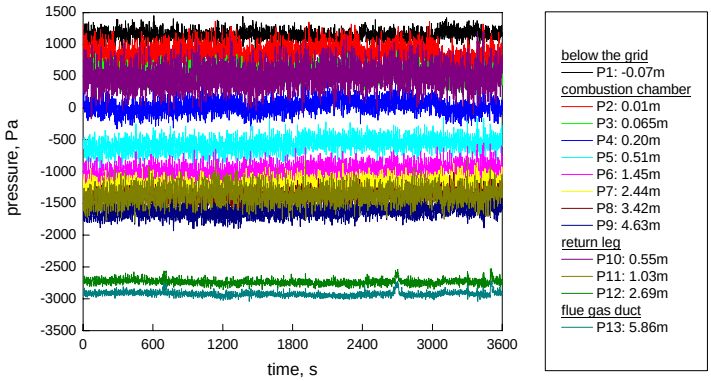

Fig. 2. Pressure fluctuations in the test rig.

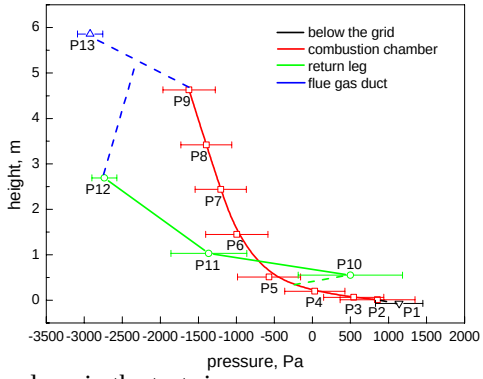

Fig. 3. Pressure loop in the test rig.

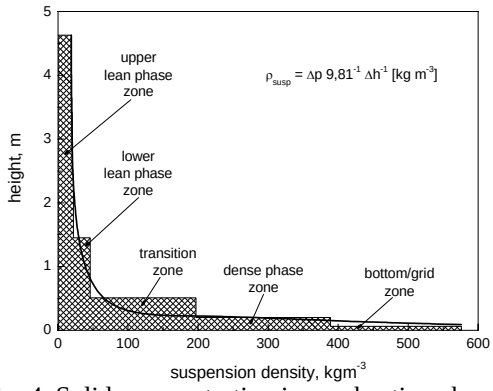

Fig. 4. Solids concentration in combustion chamber.

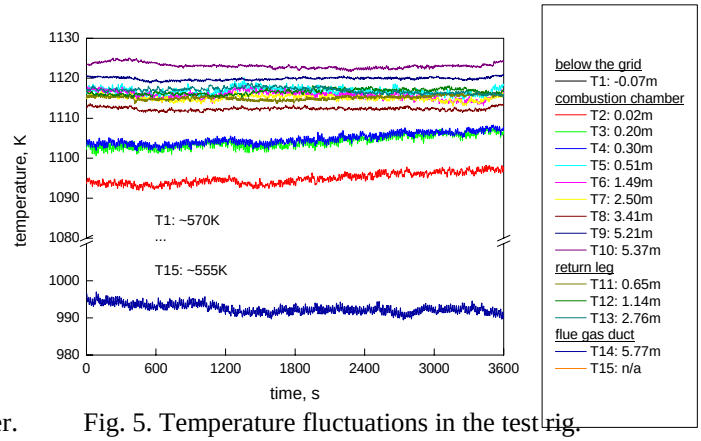

Fig. 5. Temperature fluctuations in the test rig.

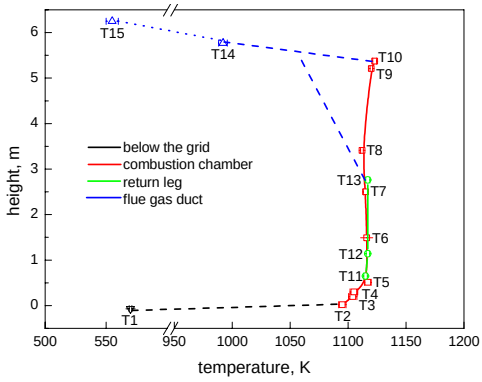

Fig. 6. Temperature loop in the test rig.

The strongest pressure fluctuations in combustion chamber were recorded in the dense phase just above the grid and the lightest fluctuations of pressure were measured in the upper part of the furnace with a dilute phase of solids. However, the broadest range of changes in pressure was registered in the loopseal. A significant difference (ca. 25 times) in solids concentration between the grid zone and the upper part of the furnace was observed. Otherwise, a very uniform density of gas-solids phase was found above the level of SG distribution points. The ranges of changes in temperature were much shorter compared to those of pressure. A slight increase in temperature was observed in the bottom zone below the level of SG distribution points, whereas, very even profile of temperature was noticed in the upper part of the furnace.

The initial results (shown above) from air-firing tests are to be a reference point for comparison to further oxy-fuel tests. The investigations are still in progress. More results are expected to be available summer 2011.

4. Acknowledgement

Scientific work was supported by the National Centre for Research and Development, as Strategic Project PS/E/2/66420/10 “Advanced Technologies for Energy Generation: Oxy-combustion technology for PC and FBC boilers with CO2 capture”. The support is gratefully acknowledged.