2nd Oxyfuel Combustion Conference

CO_2 Processing Experiences for Oxyfuel Combustion CO_2 Capture - Based on Results from Vattenfall's 30 MW_{th} Oxyfuel Pilot Plant

Jinying Yan[a]*, Marie Anheden[a], Florian Winkler[b], Nicole Schoedel[b], Roland Ritter[c], Mario Biele[d], Helge Kaß[d],

[a]*Vattenfall Research and Development AB, SE-162 87 Stockholm, Sweden*
[b]*Linde AG, D-82049 Pullach, Germany*
[c]*Linde-KCA-Dresden GMBH, D-01277 Dresden, Germany*
[d]*Vattenfall Europe Generation AG & Co. KG, D-03050 Cottbus, Germany*

Keywords: CO_2 processing, CO_2 capture, oxyfuel combustion, NO_x conversion, non-condensable separation, pilot plant test and experince,

Abstract

CO_2 processing (compression and purification) is an important unit operation for CO_2 capture from fossil fuel combustion power generation, which is principally defined by both up-stream process (fuel energy conversion) and down-stream process (emission control and CO_2 transport and storage). This paper will focus on CO_2 compression and processing for oxyfuel combustion CO_2 capture, and the technical issues to be handled including opportunities in the technology development for the CO_2 capture chain through description of test results from Vattenfall's 30 MW_{th} pilot plant in Schwarze Pumpe. Although CO_2 compression and purification is not a totally new unit operation for gas treatment, it is relatively new for the applications in oxyfuel combustion CO_2 capture in terms of the content and properties of the feed gas from integration with the boiler flue gas and flue gas cleaning processes, and the requirements of CO_2 transport and storage. Generally CO_2 compression and purification should be well understood in a suitable-scale pilot operation integrated with oxyfuel combustion process before a large scale industrial application, e.g. demo power plant, is realised.

A CO_2 compression/purification system was designed by Linde and tested in Vattenfall's oxyfuel combustion CO_2 capture pilot plant (30 MW_{th}) located in Schwarze Pumpe, Germany since late 2008. The CO_2 processing unit is located downstream the flue gas cleaning processes (i.e. ESP, wet limestone FGD and flue gas condensation). A simplified process flow diagram of the CO_2 compression/purification unit is shown in Figure 1. Several tests have been performed with some special focuses on the technical and operation issues that are critical for understanding of the processes and improvement in future development. In this paper, a discussion of the test results will show the general performance of warm section (compression and dehydration) and cold sections (non-condensable separation). Understanding of CO_2 processing for oxyfuel combustion CO_2 capture will be presented in terms of

* Corresponding author. Tel.: +46 8 739 6822; fax:+46 8 739 6802.
E-mail address: Jinying.yan@vattenfall.com.

fundamental mechanisms identified during the tests. Further technical development for the CO_2 processing unit will be proposed based on the experiences obtained from the CO_2 processing unit operated at Schwarze Pumpe.

The following topics will be described in the paper:

General Performance of the CO_2 processing Unit
NO_x balance over the warm section of the CO_2 processing unit is shown in Figure 2

Mass balance of major gas components over the cold section of the CO_2 processing unit is shown in Figure 3

General Discussions of Fundamental Mechanisms Identified in the CO_2 Processing
The following basic processes are discussed:
Conversion (oxidation) of NO to NO_2 under pressurized processes

- Oxidation reactions in gas phase
- Catalytical reactions on sorbents

Absorption of NO_x in wet-scrubbing processes

- Absorption by condensates and inter-cooling processes
- Impacts of compression and interface between gas and liquid phases

Adsorption/de-sorption of NO_x by sorbents (e. g. activated carbon and molecular seieves)

- Reversible processes – dehydration process
- Inreversible process – guard like process

Non-condensable separation and CO_2 quality impacts

- Distribution of major gas components between the different streams in the cold section

Further Developments
Suggestions are proposed for further developments including

- Development and further validation of new technical options for de-NO_x in the CO_2 processing unit and integrated within the oxyfuel combustion CO_2 capture chain, and
- Further investigation of potential important issues identified during the tests such as overall optimization of gas cleaning processes in the whole CO_2 capture chain, overall emission characteristics and impacts, and material/corrosion issues related to the new technical options

Conclusions and recommendations will be given based on the results and discussions above.

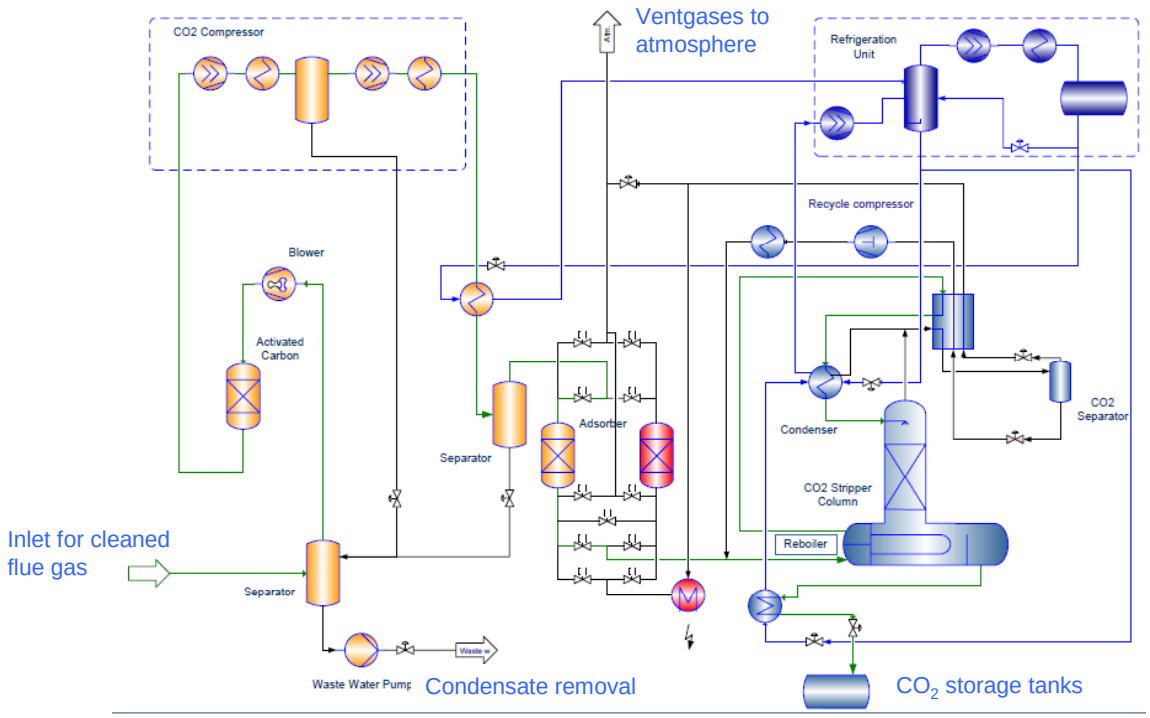

Figure 1. Illustration of the CO_2 compression/purification system for Vattenfall oxyfuel combustion CO_2 capture pilot ($30MW_{th}$) at Schwarze Pumpe, Germany

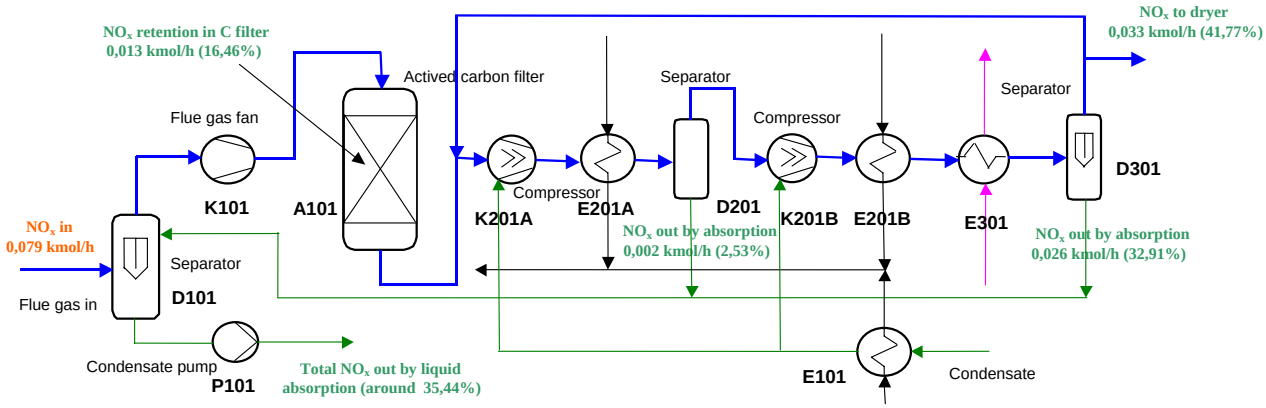

Figure 2. Overall mass balance of NO_x in the warm section of the CO_2 processing unit under the test conditions (total output NO_x from the defined system accounts for around 94% of total input NO_x)

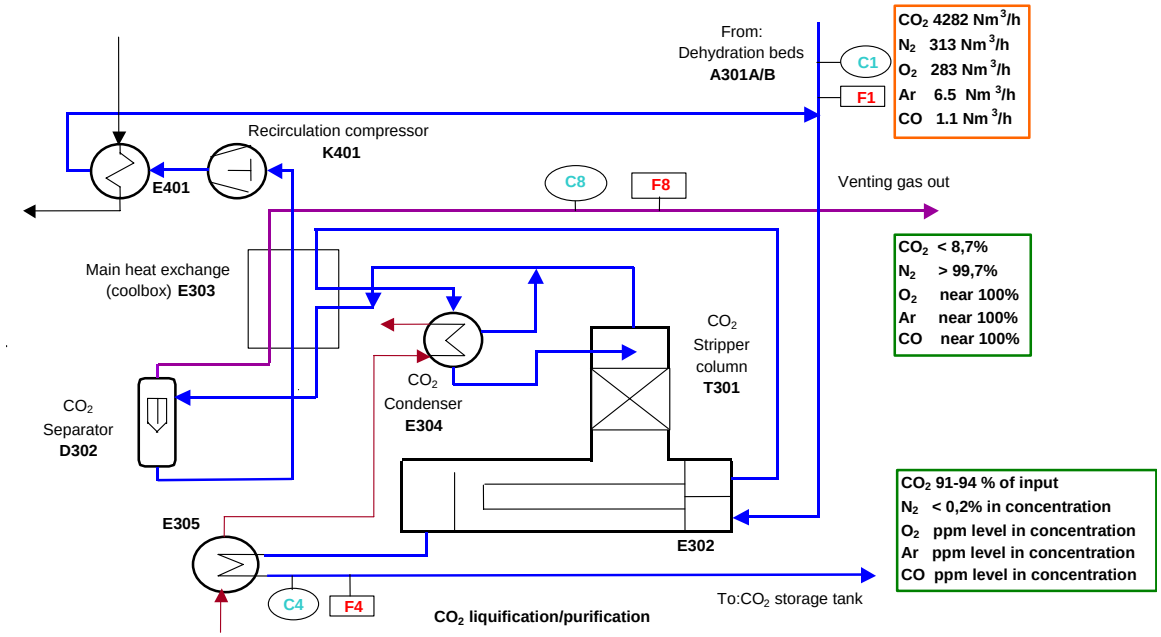

Figure 3. Overall mass balance of major gas components over the cold section of the CO_2 processing unit under the test conditions (main measurements: **C** – stream compositions; **F** – stream mass flow rates)

Main References:

Ritter, R., Holling, B., Altman, H., Biele, M. Konzepte und Ausblick für eine CO_2-Anlage eines Oxyfuel Kraftwerkes am Beispiel Schwarze Pumpe. Kraftwerkstechnisches Kolloquium 2007.

Thébault, C., Yan, J.*, Biele, M., Kaß, H., Ritter, R., Jacoby, J., Anheden, M. Behaviors of NO_x and SO_x in CO_2 Compression/Purification Processes - Experience at 30 MW_{th} oxyfuel combustion pilot. The 1st IEA Oxyfuel Combustion Conference. Cottbus, Germany, September 8-12, 2009.