2nd Oxyfuel Combustion Conference

O_2/RFG Coal Combustion Results on a 300kW Pilot Scale Facility

ZHANG Tai, LIU Zhaohui*, HUANG Xiaohong

LIU Jingzhang WANG Dingbang and ZHENG Chuguang

State Key Laboratory of Coal Combustion,
Huazhong University of Science and Technology
Wuhan 430074, China

The present work was addressed toward the O_2/RFG coal combustion results on a 300kW pilot scale facility, and discussed the impact of the different flue gas recycle ratios on the O_2/RFG coal combustion. In this study, a Chinese lean coal was burned with air and three O_2/RFG conditions in the pilot scale Oxy-fuel coal combustion facility. The composition of the flue gas was sampled and analyzed by the FT/IR gas analyzer. The ashes were sampled in different place and analyzed to study the burnout rate and the mineral transformation. And in-furnace limestone injection was used to study the desulfurization efficiency. The comparison was made between the air combustion and O_2/RFG combustion. It can be seen that the low NO_x characteristic of the Oxy-fuel combustion causes lower emission of NO compared with the air combustion. For the emission of SO2, Fuel-S to SO2 conversion rate dropped from 77% in air to 50% under O_2/RFG condition. And the desulfurization efficiencies of the air combustion and O_2/RFG combustion were 28.4% and 34.5%, respectively. The contribution of SO_2 enriched in the flue gas to the desulfurization efficiency was more than the contribution of increased reactivity of the limestone. By the analyzing of the ash, it was the similar between the air combustion and O_2/RFG combustion.

Key word: Pilot Scale Study; O_2/RFG Coal Combustion; desulfurization.

1. Introduction

In 2008, the consumption of coal was 2.8 billion tons in China, 80 percent of which was used by direct combustion, and the CO_2 emission accounts for 70 percent of the total CO_2 emissions. Thus, how to control the emissions of CO2 from coal-fired flue gas is the key technology. Oxy-fuel combustion of pulverized coal, using oxygen and recycled flue gas (O_2/RFG) to replace air for combustion, has been recognized as a promising technology for pulverized coal-fired power plants to control CO_2 emissions. It can achieve a CO_2 concentration of more than 95% in flue gas, which enables an easy recovery of CO_2. Its cost for CO_2 capture was estimated to be less expensive than that of air firing combustion with conventional amine-based CO_2 separation. [1, 2]From 1995, the experimental studies has been done in the State Key Laboratory of Coal Combustion (SKLCC), and under the support of 973 and 863 projects, SKLCC has successfully built up a 300KWt oxy-fuel pilot facility with multi-pollutants control in 2006. This is the largest of its kind in China by now, and validation of oxy-fuel concept has been achieved on such facility. CO_2 concentration in the flue gas can reach 93% (dry basis), and emissions of NO_x, SOx and Hg were well controlled as well. Considering the limited studies on the pilot scale O_2/RFG coal combustion in the literature, more study are required

* Corresponding author. Tel.: +86-27-87545526; fax: +86-27-87545526.
E-mail address: zliu@hust.edu.cn.

to further understand the characteristics of the O_2/RFG combustion, including the SO_2 and NO emission, as well as the formation of ash .

The present work was addressed toward the O_2/RFG coal combustion results on a 300kW pilot scale facility. In this study, a Chinese lean coal was burned with air and O_2/RFG conditions in the pilot scale Oxy-fuel coal combustion test. And in-furnace limestone injection was used to study the desulfurization efficiency. The composition of the flue gas was sampled and analyzed by the FT/IR gas analyzer. The ashes were sampled in different place and analyzed to study the burnout rate and the mineral transformation. The comparison was made between the air combustion and O_2/RFG combustion.

2. Experimental Facility and Combustion condition

The combustion experiment was carried out in the 0.3MW pilot scale Oxy-fuel coal combustion test located at Huazhong University of Science and Technology, Wuhan City, in middle of China. The experimental facility consists of a gas-supply system, a pulverized coal feeding system, a down-flow swirl burner, a furnace with the height of 8.3m and the inner diameter of 0.6m, a flue gas cleaning system, as well as a measurement and data collection system , which is showed in Fig.1.

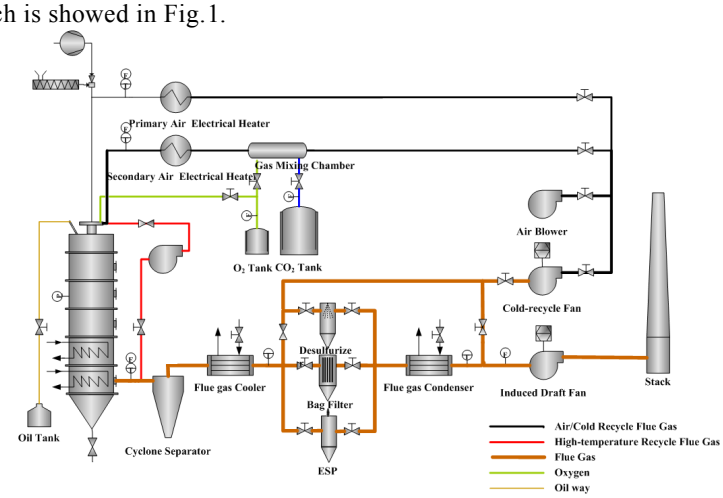

Fig.1 Schematics of the 0.3MW pilot scale Oxy-fuel coal combustion test

In the experiment, a Chinese lean coal was burned in the test, and the characteristics of the coal are given in Table 1. Three flue gas recycle ratios (73%, 76%, and 79%) in the O_2/RFG coal combustion were shifted to achieve the different concentration of the inlet oxygen. And the in-furnace limestone injection was carried out on the air combustion and the O_2/RFG coal combustion, that the flue gas recycle ratios was 76%. There are also probing ports downstream of the combustor that allow the measurements of the flue gas composition, temperatures and the sampling of the ash. Flue gas composition (O_2, CO_2, CO, NO and SO_2) were continuously monitored by the Horiba VA3000 Gas Analyzer and the FT/IR Gas Analyzer (GASMET DX4000). The flue gas analyzers were located between the furnace export and the cyclone. Analyzers were zeroed and spanned at the beginning of each condition change. For gas species concentrations, a standard water-cooled gas probe was used. The ashes were sampled at the behind of the cyclone, and the low temperature ash with different combustion atmospheres was analyzed semi-quantitatively with a SHIMADZU XD-3A X-ray diffractmeter (XRD).

Table 1 Properties of Pulverized Coal

Proximate, wt%				Ultimate, wt%					Heating Value(MJ/kg)
M_{ad}	V_{ad}	A_{ad}	FC_{ad}	C_{ad}	H_{ad}	O_{ad}	N_{ad}	S_{ad}	21.9
1.124	13.894	36.112	48.915	55.6	2.441	4.938	0.729	0.742	

3. Results and Discussion

In O_2/RFG combustion mode, air is replaced by O_2 and the flue gas as the inert gas. For the heat capacity of CO_2 is higher than N_2, the Oxy-fuel combustion temperature is lower than the air combustion with the same concentration of O_2. It was thus necessary to increase the concentration of O_2 in the feed gas to raise the combustion temperature

and close to the heat transfer of the air combustion. From Fig.1, it can be seen that, the concentration of CO_2 without water could be reached to 90%, and it proved that the pilot scale oxy-fuel combustion was feasible. For the research on the concentration of CO in the fuel gas, it could be well-controlled, when the concentration of O_2 reached above 3% under the Oxy-fuel combustion.

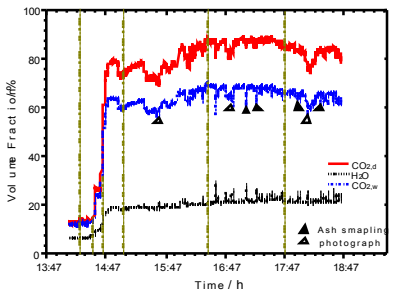

Fig.2 Measured furnace export CO_2 and H_2O concentrations

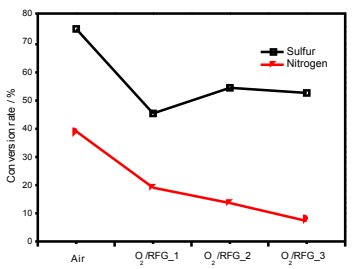

Fig.3 Conversion rate of Fuel-S to SO2 and Nitrogen to NO during four kinds of gas atmospheres

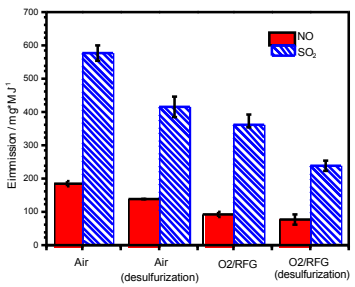

Fig.4 Emission of NO and SO_2 under different gas atmospheres

Fig.3 compares the conversion rate of the nitrogen and sulphur for coal combustion in three flue gas recycle ratios of O_2/RFG and air, respectively. And from the emission of SO_2, Fuel-S to SO2 conversion rate dropped from 77% in air to 50% under O_2/RFG condition. It might be caused by the low coal rank in our study that the conversion rate was lower than the E. Croiset and K.V. Thambimuthu's investigation[3]. The low-NO_x property of the Oxy-fuel combustion made its NO emission much lower than the air combustion. The affect of in-furnace limestone injection on the desulfurization efficiency was also showed on Fig.4. The desulfurization efficiencies of air combustion and O_2/RFG combustion were 28.4% and 34.5% by calculation, respectively. It indicated that the effect of direct sulfation on the desulfurization was not so significant than we thought. According to the contrast calculation, the contribution of SO_2 enriched in the flue gas to the desulfurization efficiency was more than the contribution of increased reactivity of the limestone, which is also seen in Liu (2000) [4].

The analysis of the sampled ashes shows the coal burnout ratio of the oxy-fuel combustion can be similar with the air combustion. And there is not much difference among the results of the ashes analyzed by XRD. The coal can be well burned out under the oxy-fuel combustion.

REFERENCE

[1] Nsakala, N. Y., et al.. Engineering feasibility of CO2 capture on existing U.S. coal-fired power plant. First National Conference on Carbon Sequestration, Washington, D.C., May 15-17, 2001.

[2] Rohan Stanger, Terry Wall, Sulphur impacts during pulverised coal combustion in oxy-fuel technology for carbon capture and storage. Progress in Energy and Combustion Science, 2011. 37: p. 69-88.

[3] Croiset, E. and K. Thambimuthu, NOx and SO2 emissions from O2/CO2 recycle coal combustion. Fuel, 2001. 80(14): p. 2117-2121.

[4] HaO Liu, Shiro Katagirl and Ken Okazaki. Drastic SO_x Removal and Influences of Various Factors in O2/CO2 Pulverized Coal Combustion System. Energy & Fuel , 2001.15: p.403-412.