In-situ Extra Heavy Oil Production - benchmarking of CO_2 capture solutions

Karina Hofstad, Knut Ingvar Åsen, Kjersti Wilhelmsen, Erik Mikkelsen

2nd Oxyfuel Combustion Conference

Yeppoon Australia, 12th – 16th September 2011

Contents



- Statoil's Extra Heavy Oil Activity (EHO) in Canada
- Extra Heavy Oil Value Chain
- CO2 Capture Options for a Steam Assisted Gravity Drainage (SAGD) Facility
- Study Basis
- Comparison of CO2 capture technologies
  - Energy consumption, emissions and avoided CO_2
  - Capex/Opex/CO_2 Avoided Cost
- Conclusion

Statoil

Statoil's Extra Heavy Oil Activity in Canada

- Established in Calgary, 2007
- 1,100 km^2 of oil sands leases
- Estimated 2.2 bn bbl recoverable reserves
  - Kai Kosh Deshe Project (KKD) (~>200 kb/d)
  - Acquisition of a 40% interest by PTTEP (Nov 2010)
  - Statoil retains operatorship

Statoil

Statoil Leismer and KKD Project

- First phase (18.8 kb/d) of Kai Kosh Deshe (KKD) Project
- Successful commissioning and start-up of Leismer Demonstration Project
  - First steam Sept 3, 2010
  - First SAGD Oil January 2011

- KKD Project
  - ~>200 kb/d
  - Regulatory Approval (Jan 2011)
    - 40,000 b/d Leismer
    - 40,000 b/d Corner

EHO SAGD Production

- The most common method for in-situ Extra Heavy Oil (EHO) production is Steam Assisted Gravity Drainage (SAGD).
- Injection of steam into the reservoir to reduce the viscosity of the bitumen

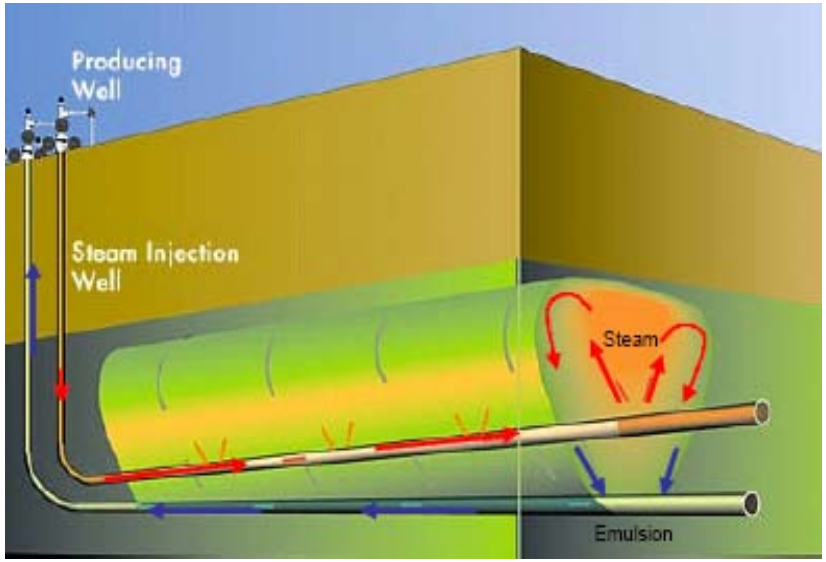

- Steam is produced by Once Through Steam Generators (OTSGs).
- SAGD may require a Steam to Oil Ratio (SOR) of 2.5-3.0
- **With natural gas as the main fuel the CO2 emission per produced barrel of heavy oil is very high (60–80 kg/bbl).**

EHO Value Chain

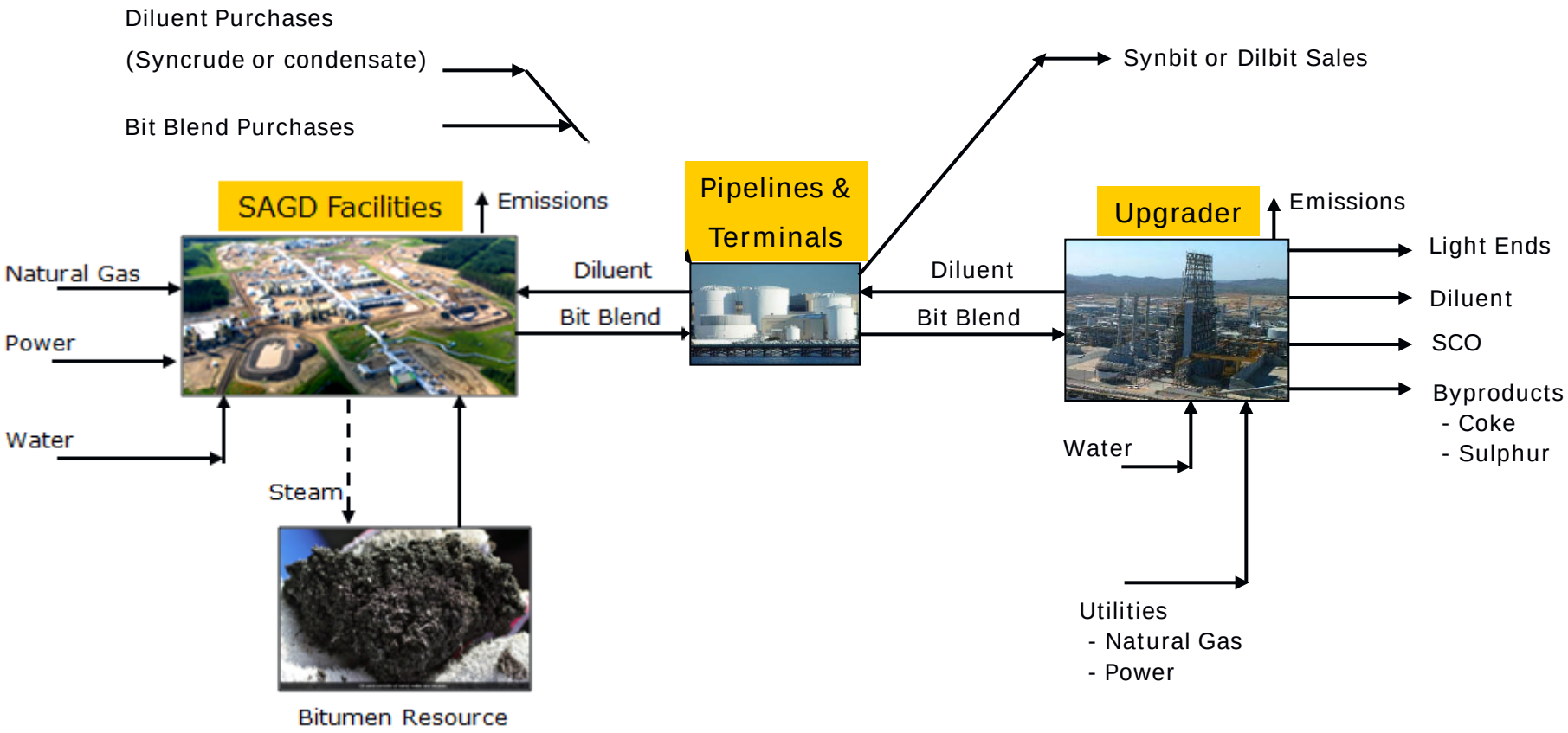

Statoil

SAGD EHO Production Facility Reference Case- no CO_2 capture

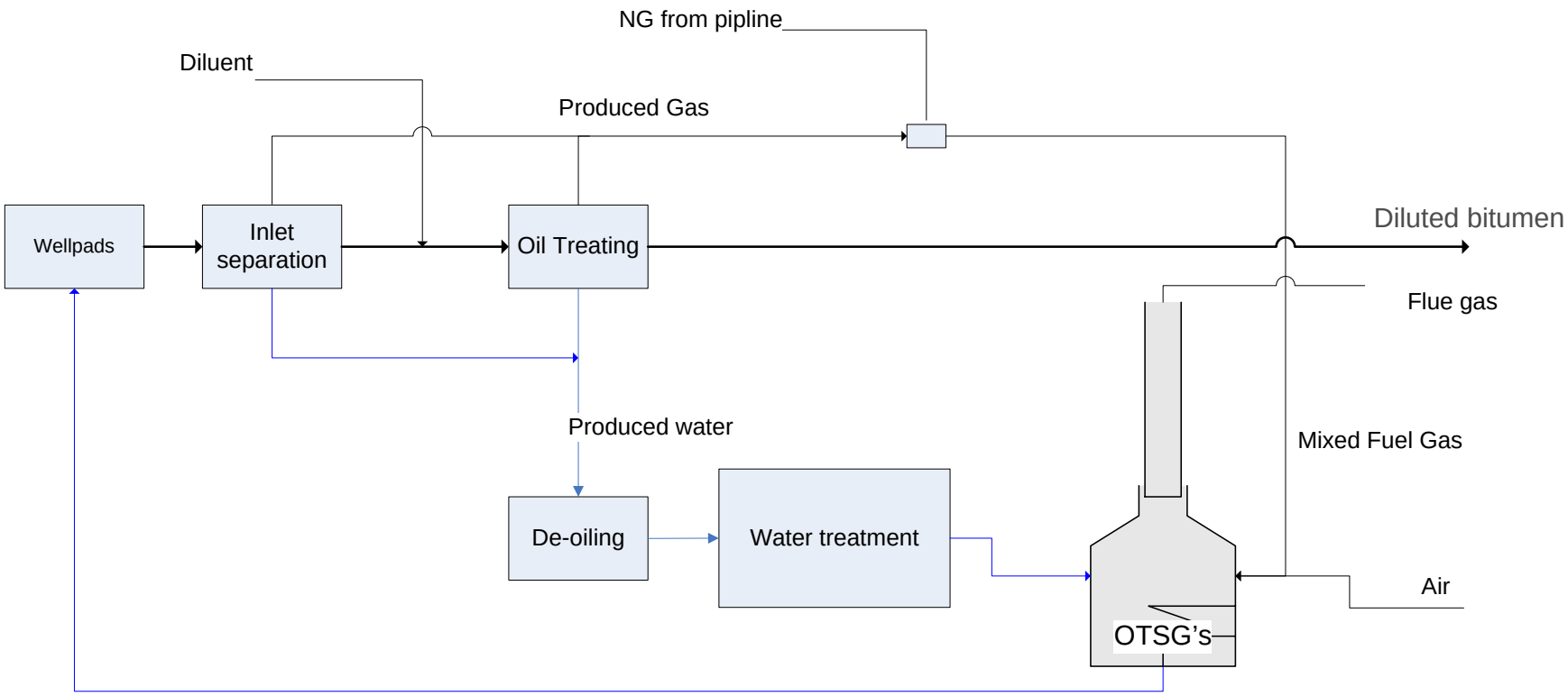

Study basis

- **Bitumen Production Capacity**
  - 60 000 bbl/d
- **Steam Production from 9 OTSG's**
  - ~30 000 ton/d saturated steam at 90 bar
  - Steam quality from OTSG 75% steam (25% condensate)
  - Emitting 1.6 mill ton CO2/y
- **Dry NG from grid (>91% CH4) (additional produced gas from EHO wells)**
- **Electricity is imported from grid**
- **Cooling: air cooling and glycol/water mixture**
- **CO2 product specification**
  - CO2 >99 vol%
  - H2O <50 ppm
  - 220 Bar

- **Statoil in house modelling and economic tools for dimentioning and costing**

Statoil

CO_2 Capture options

- Post-combustion (MEA)
- Pre-combustion (H_2 production)
- Oxy-combustion

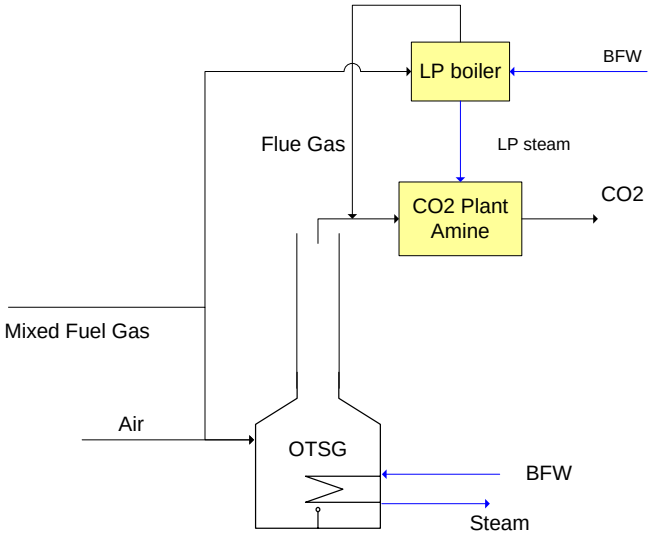

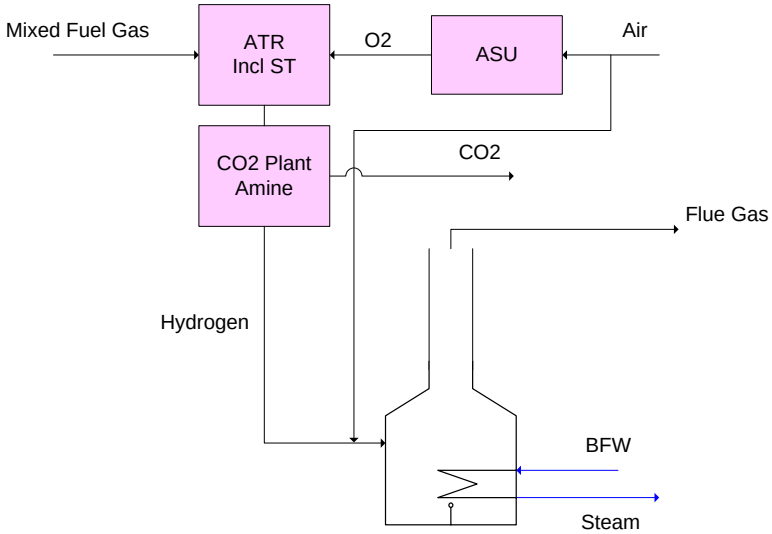

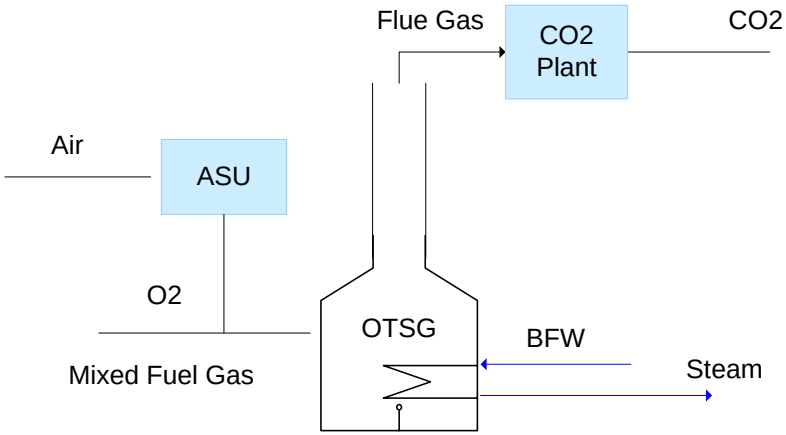

Statoil

Energy Consumption

Energy Consumption	Ref. Case no capture	Post-combustion	Oxy-combustion	Pre-combustion
(NG + produced gas) consumption (MJ/bbl)	1313	1650	1282	2045
Electric power import (kWh/bbl)	20	36	58	32
Total energy input (MJ/bbl)	1458	1910	1700	2276
Additional energy consumption (%)		31	17	56

50% efficiency assumed for power production

- Oxy-combustion CO_2 capture has the lowest additional energy consumption

Statoil

Emissions and CO_2 avoided

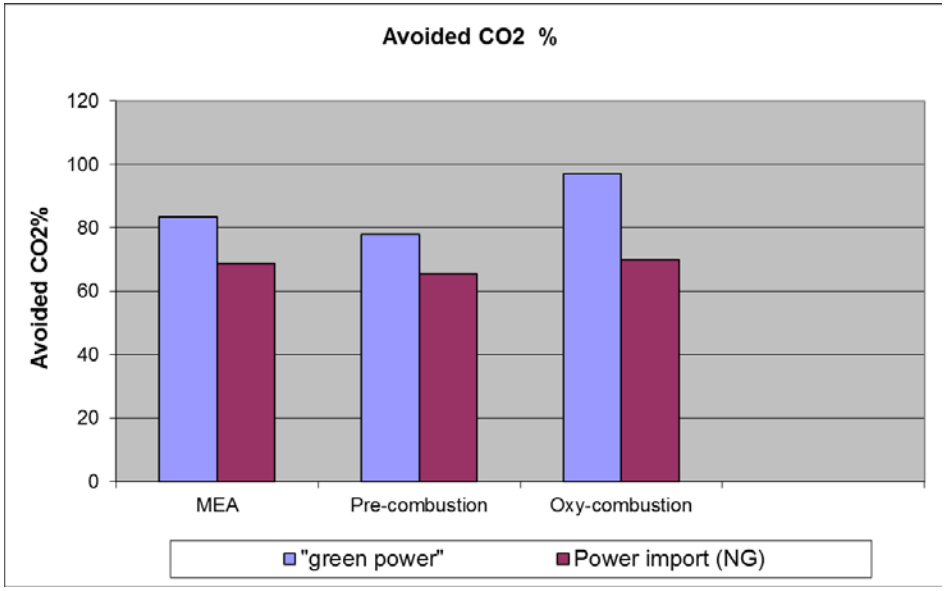

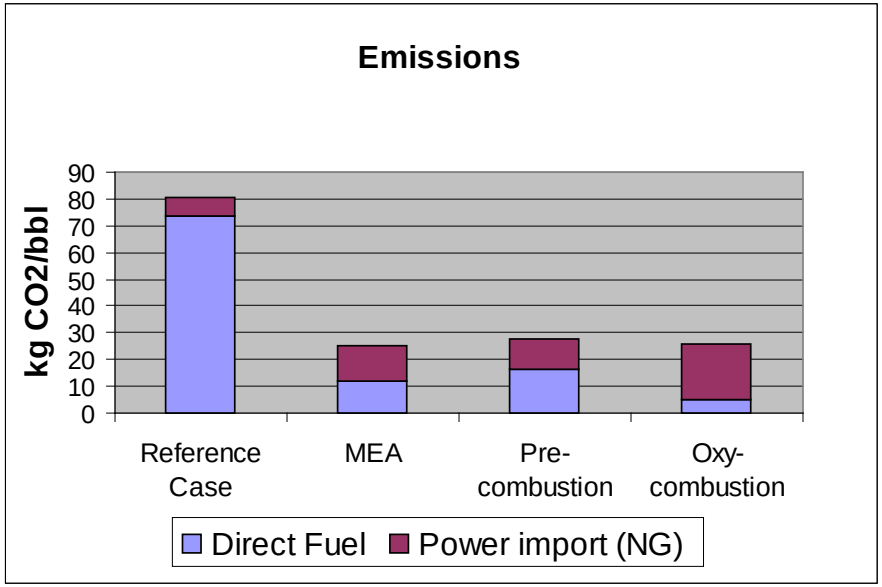

- Superior HSE performance (in principle a «closed» system offering almost full CO_2 capture)
- Less complex

Statoil

Relative CAPEX

CAPEX	Post-combustion	Oxy-combustion	Pre-combustion
CO2 capture section	1.0	1.0	1.7
General utilities	1.0	0.8	0.6
Air cooling section	1.0	0.6	1.2
SUM CAPEX	1.0	0.9	1.5

- Pre-combustion CAPEX is 50% higher than post- and oxy-combustion
- Post-combustion and oxy-combustion capture is in the current estimate quite similar

Relative CO_2 avoided cost

- **CO2 avoided cost (Capex and Opex)**

Post-combustion	**1.0**
Oxy-combustion	**0.9**
Pre-combustion	**1.6**

- **Opex cost**
  - **Pre-combustion has very high operational costs**
  - **Oxy-combustion is less sensitive to escalating energy cost**
    - **natural gas vs. electricity price spread is important**

Conclusion

- Pre-combustion capture is not favourable regarding neither total energy demand, avoided rate nor CO_2 avoided cost
- Oxy-combustion has the lowest total energy demand per bbl of EHO produced
- Post-combustion and oxy-combustion show very similar CO_2 avoided when electricity import is based on natural gas
- **For SAGD, oxy-combustion capture is a promising option regarding energy consumption and CO_2 avoided cost**

Thank you

In-situ Heavy Oil Production – benchmarking of CO2 capture solutions

Karina Hofstad

Principal Researcher Process Downstream

khho@statoil.com, tel: +47 48 02 78 53

www.statoil.com

Statoil