IHI
Realize your dreams

# Feasibility Study of the CCS Deployment to Australia by Use of Oxyfuel Technologies

3rd Oxyfuel Combustion Conference
9-13 September 2013

Takashi Kiga, Takahiro Tanaka, Terutoshi Uchida, Akihiro Komaki, Toshihiko Yamada, Naoki Fujiwara (IHI Corp.)
and Chris Spero (CS Energy)

# Contents

IHI
Realize your dreams

- Feasibility Study of the CCS Deployment to Australia by Use of Oxyfuel Technologies

  - ✓ Background & Initial Approach of FS
  - ✓ Power Plant
    - Specifications
    - System Flow Diagram
    - Plant Layout
    - Performances
  - ✓ $CO_2$ Pipeline Routing
  - ✓ Cost Evaluation
    - Levelized Cost of Electricity
    - Utilization of Gases
    - Utilization of Water
    - Economy
  - ✓ Conclusions -Passage to 500MW Oxyfuel-

# Background of FS (1)

IHI
Realize your dreams

## Features of Oxyfuel Technology

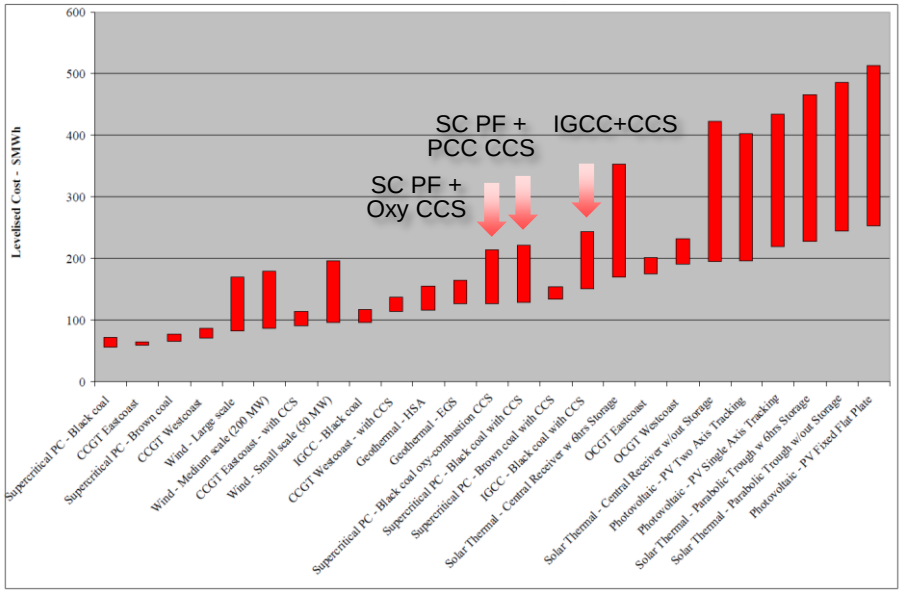


Australia DRET, Australian Electricity Generation Technology Costs – Reference Case 2011

- ✓ Many reports indicate Oxyfuel is the cheapest among three capture options,
- ✓ The higher is the thermal efficiency, the lower is the energy penalty,
- ✓ Main energy source to capture $CO_2$ is electricity and the impact to conventional power plant system is small,
- ✓ Huge amount of nitrogen and water can be obtained as byproduct,
- ✓ Sulfuric acid or gypsum can be obtained as byproduct if FGD is not necessary to be installed to normal power stations in the subject area,
- ✓ SCR and ammonia are not needed because NO is automatically decomposed in the boiler furnace, and
- ✓ There will be no other toxic emissions to the atmosphere than air firing.

# Background of FS (2)

IHI
Realize your dreams

## Features of Australia

- ✓ 94% of primary energy is fossil fuel, 70% of electricity is produced by coal, and per-capita $CO_2$ emission is relatively high like US or Canada,
- ✓ Very positive about $CO_2$ reduction; carbon pricing, regulations, GCCSI, etc.,
- ✓ Very supportive to RD&D of CCS; CCS Flagship, Coal21 Fund, ANLECR&D, CO2CRC, etc. Callide Oxyfuel Project is supported by Federal and QLD State government and Australian coal industry,
- ✓ There are extensive geological data and steady property management as a country of resources,
- ✓ Population is small in a vast area of land, that means a little number of landowners to negotiate about routing pipeline,
- ✓ Arid area and lack of water, and
- ✓ Coal firing power plants do not have SCR and FGD.

# Background of FS (3)

IHI
Realize your dreams

## Oxyfuel in Australia

- ✓ The amount of makeup water can be reduced in arid area by utilizing water captured in the process of gas purification. It will be increased when PCC is applied,
- ✓ SCR and FGD should not be installed in the main stream to control NOx and SO2 emissions in air firing, and
- ✓ The Callide Oxyfuel Project is a collaborative project between Australia and Japan and is the biggest one in Australia not only in capacity but also in budget applying CCS technologies to coal-fired power plants.

Because Australia is very suitable country to apply oxyfuel technology and the deployment of the outcome from demonstration projects is vital, we conducted a feasibility study of the CCS deployment to Australia by use of oxyfuel technologies.

# Initial Approach of FS

The feasibility study was conducted for the following CCS project in Australia;

Subject area: The Southeast of Queensland
Power plant: USC+CCS
- Fuel: Pulverised coal (black coal)
- Output (gross): 1,000MW
  (250MW (oxyfuel)+750MW (capture-ready))
- Steam condition: Ultra supercritical with reheat
- Cooling system: Dry cooling

$CO_2$ transportation: Pipeline
$CO_2$ storage: Wandoan site (Surat basin)
- 1 Mtpa from 250MW unit with additional 3 Mtpa in the future

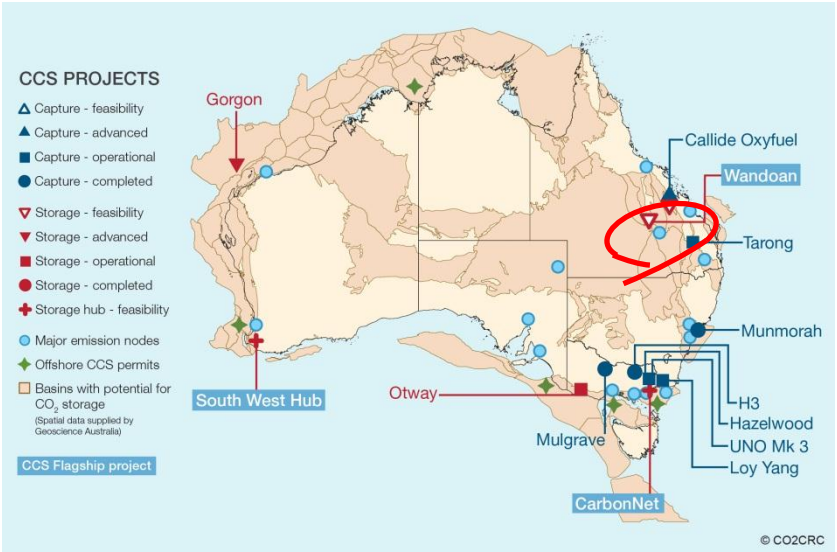


1000MW unit is too large considering;
- ✓ Near term storage capacity,
- ✓ Site size (ASU and CPU need a large space), and
- ✓ Power grid capacity.

Combination of 250MW and 750MW is difficult to operate.

⇒ Reduce the output to 500MW

# Specifications of Power Unit

IHI
Realize your dreams

- Ambient conditions
  - ✓ Dry-bulb temperature: 30℃
  - ✓ Barometric pressure: 97.5kPa
  - ✓ Relative humidity: 42%
- Cooling System
  - ✓ Dry Cooling
- Output (Gross)
  - ✓ 500 MW
- Power Plant Steam Conditions
  - ✓ Main steam pressure (HPT inlet): 25.0MPa
  - ✓ Steam temperature (HPT/IPT inlet): 600/600℃
- Coal Properties

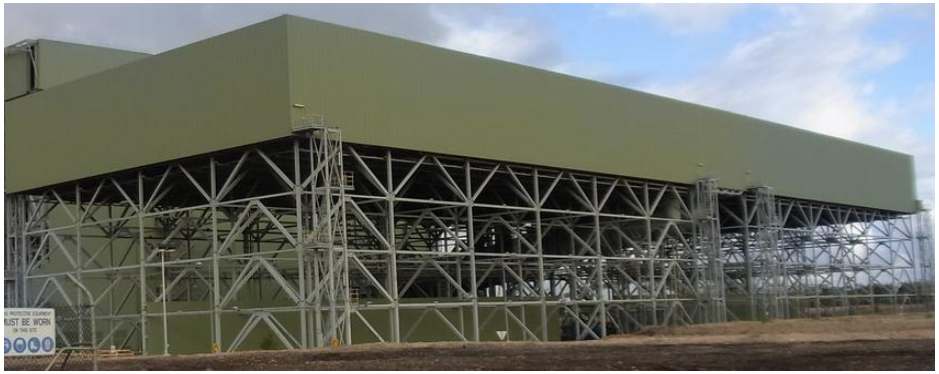

Dry cooling system

| Item | Unit | Value |
|---|---|---|
| Calorific value(HHV) | MJ/kg, as fired | 20.1 |
| Carbon | wt%, as fired | 46.7 |
| Hydrogen | wt%, as fired | 4.0 |
| Nitrogen | wt%, as fired | 0.6 |
| Oxygen | wt%, as fired | 9.7 |
| Sulfur | wt%, as fired | 0.3 |
| Total moiisture | wt%, as fired | 12.4 |
| Ash | wt%, as fired | 25.4 |
| Fuel ratio | - | 0.86 |

# System Flow Diagram

## ■Oxy-Fired Boiler

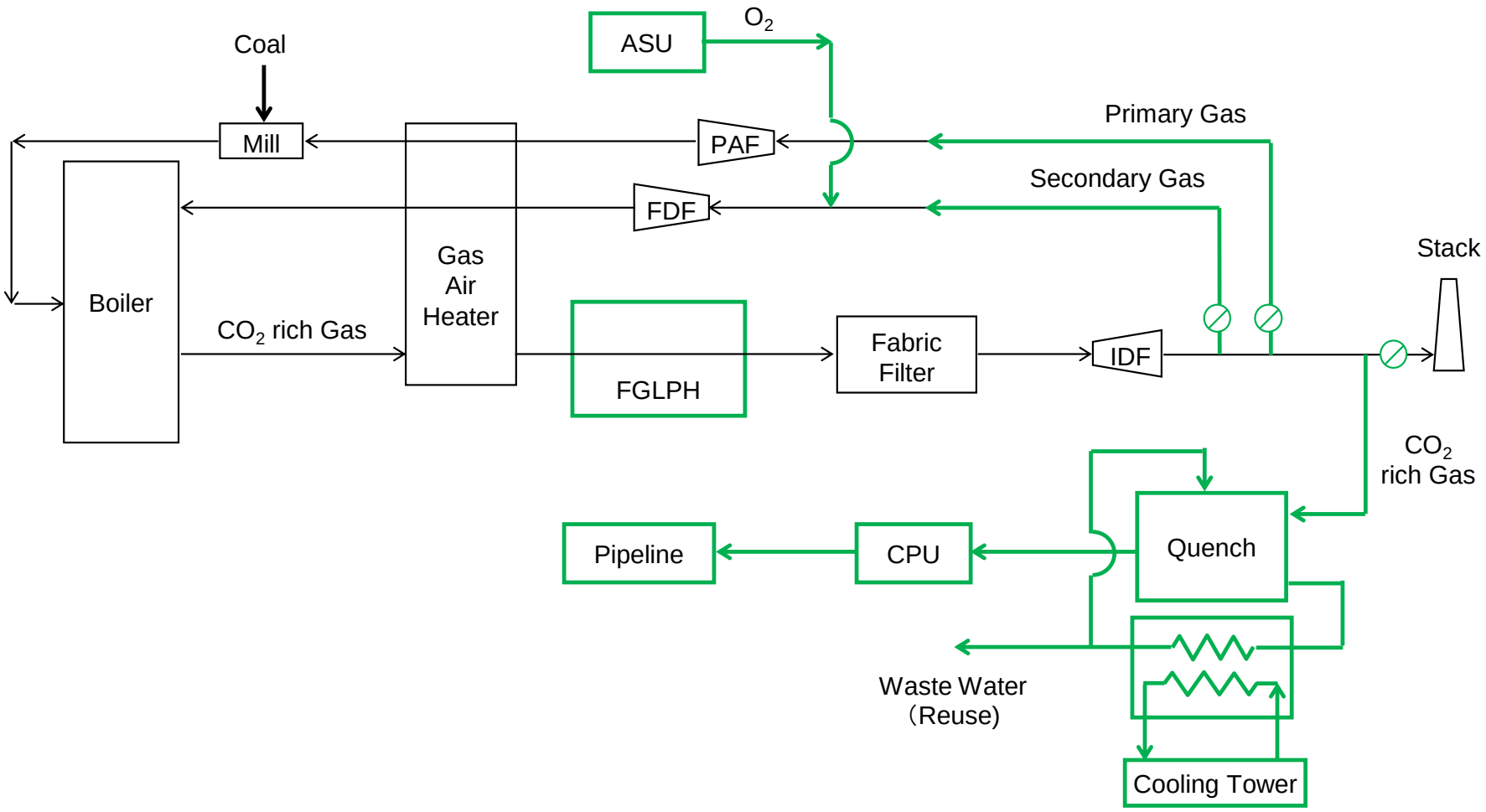

# Specifications of ASU & CPU

IHI
Realize your dreams

## Specifications of ASU

- ✓ Type: Cryogenic
- ✓ Maximum $O_2$ production: 200t/h x 2 trains
- ✓ $O_2$ purity: 96.5 vol%

## Specifications of CPU

- ✓ Maximum flow rate: 270t/h x 2 trains
- ✓ Gas composition at the inlet:
  - $H_2O$ 8.1 vol% wet
  - $CO_2$ 72.84 vol% wet
- ✓ Product: $CO_2$
  - Liquid (45℃ x 16 MPa(abs))
  - Purity 99.9%
  - Recovery rate >98%

# System Flow Diagram

IHI
Realize your dreams

- CPU for Oxy-Fired Boiler with 250MW-equivalent Capacity

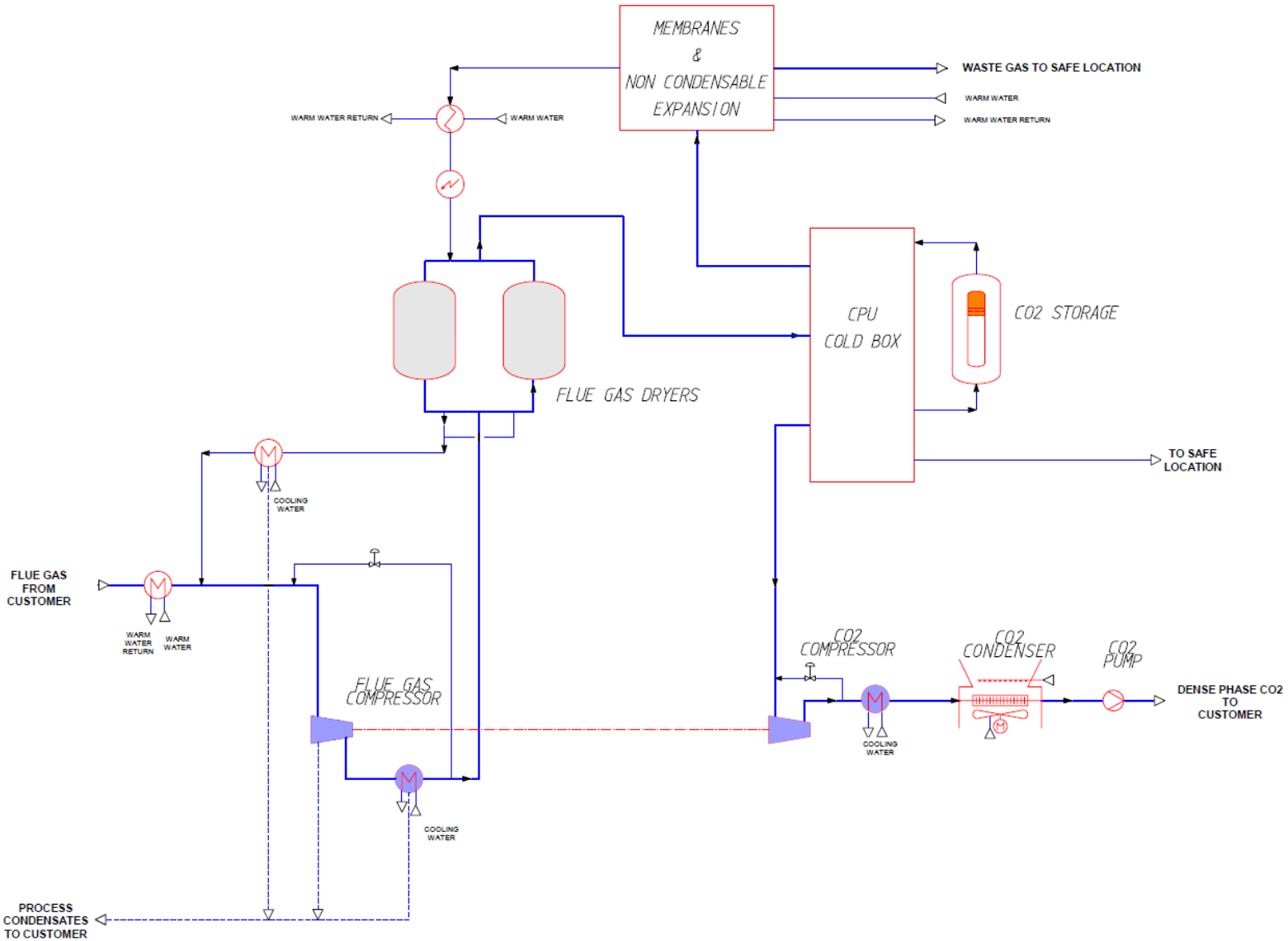

# Plant Layout (2D)

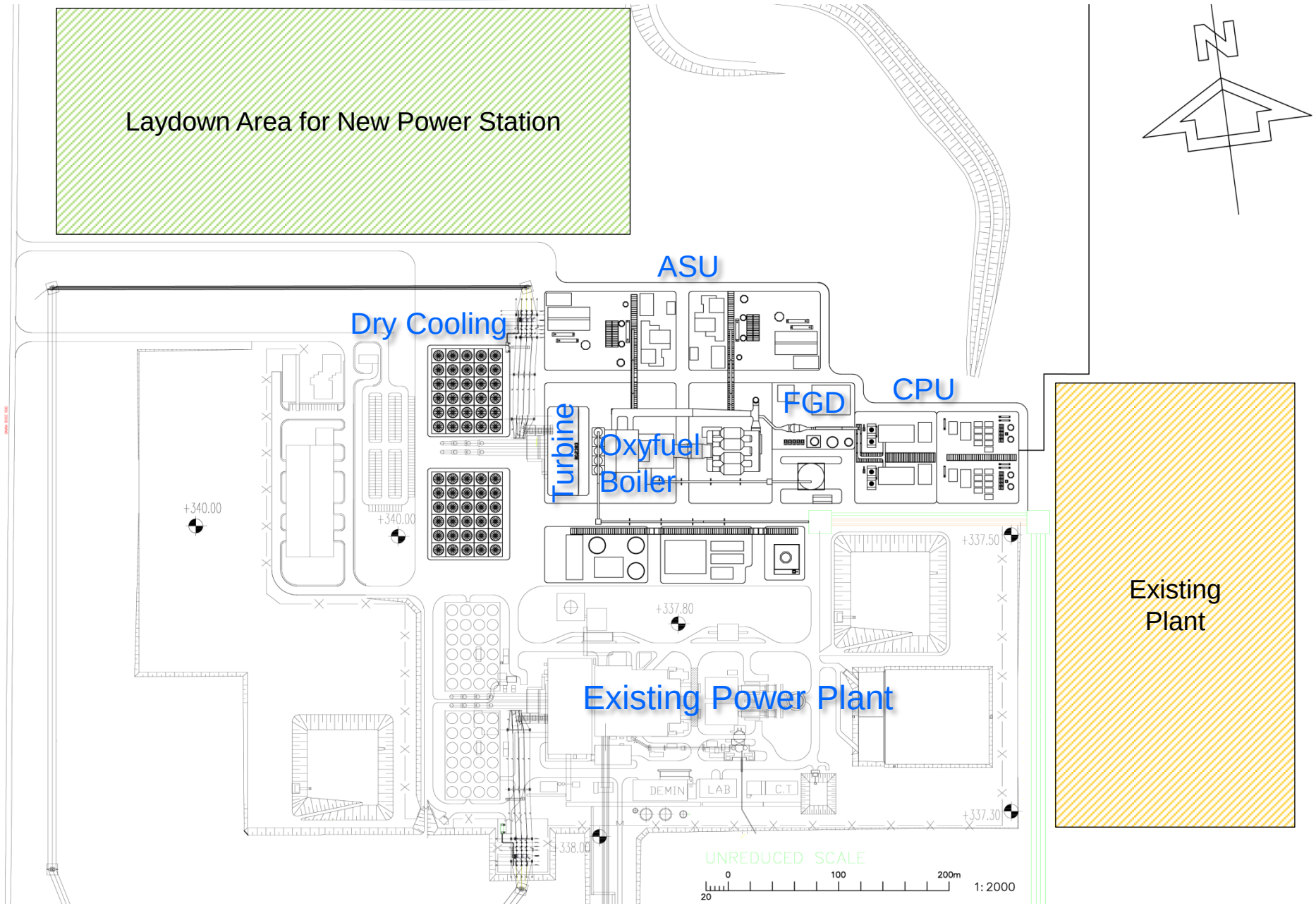

# Plant Layout (3D)

IHI
Realize your dreams

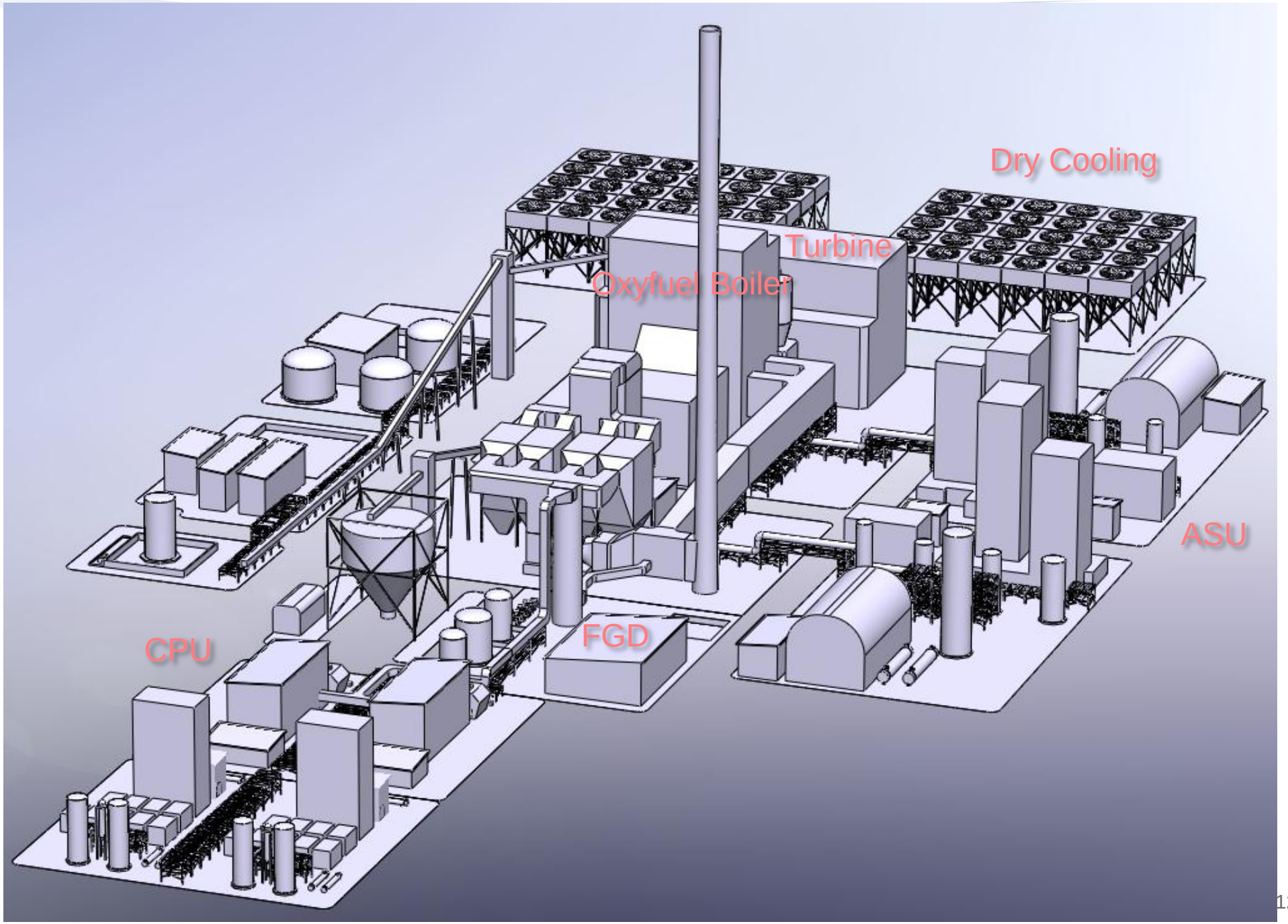

# Performances of Power Plant

IHI
Realize your dreams

## Performances

| | | Oxy-firing | Air-firing |
|---|---|---|---|
| Gross output | MW | 500 | 500 |
| Net output | MW | 345 | 473 |
| Gross Thermal Efficiency (HHV base) | % | 45.7 | 42.1 |
| Net Thermal Efficiency (HHV base) | % | 31.5 | 39.9 |
| Auxiliary power consumption | MW | 155 | 27 |
| $CO_2$ emission | Mtpa | 0.0505 | |
| (Net base) | g/kWh | 20 | 740 |
| $CO_2$ captured | Mtpa | 2.49 | |
| Fuel consumption | t/h | 196 | 212 |
| Heat rate(Gross) | kJ/kWh | 7880 | 8550 |
| Heat rate(Net) | kJ/kWh | 11412 | 9038 |

# $CO_2$ Pipeline Routing

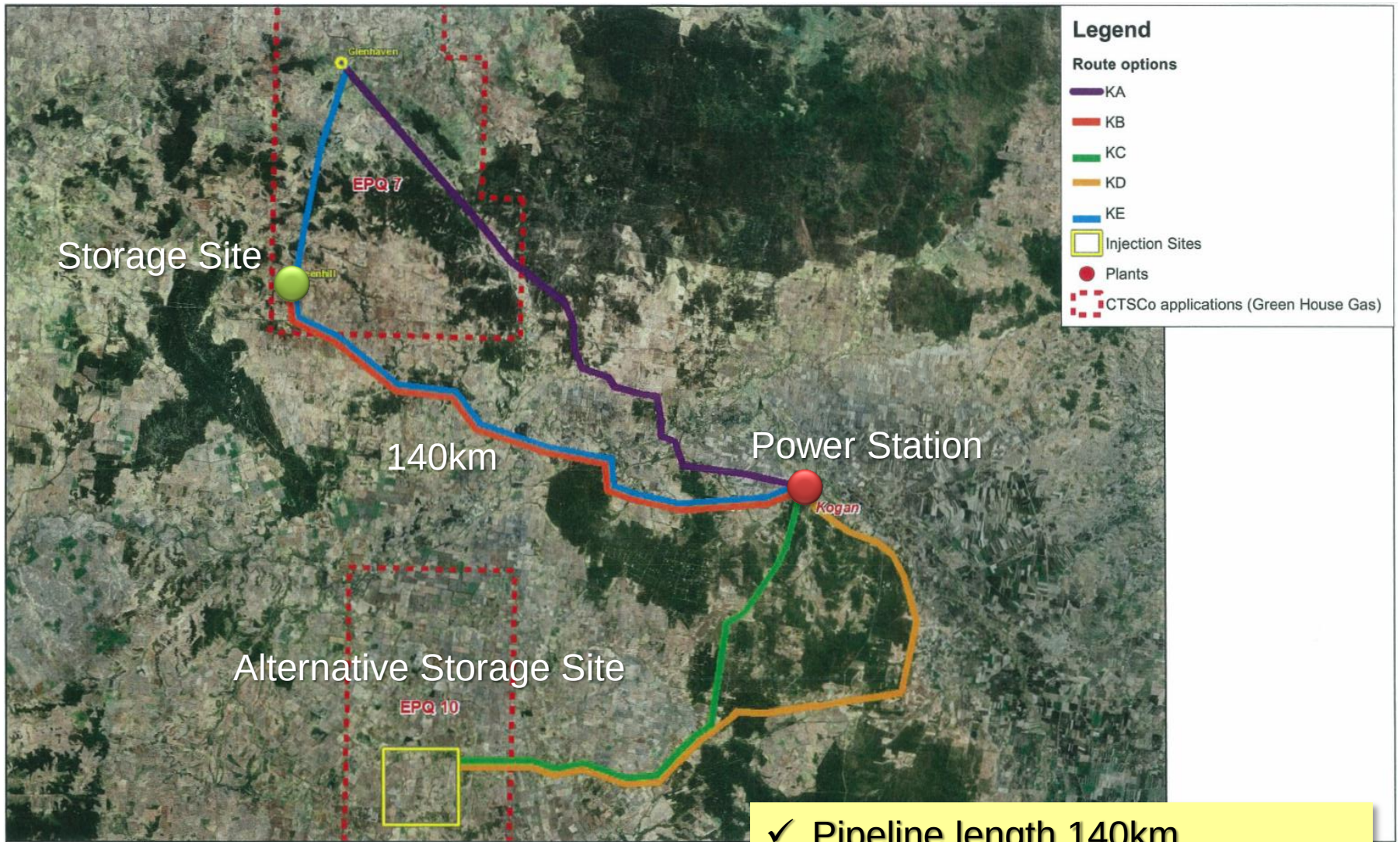


- ✓ Pipeline length 140km
- ✓ φ200 for 1Mtpa / φ350 for 4Mtpa
- ✓ Design Pressure 160bar

# Levelized Cost of Electricity

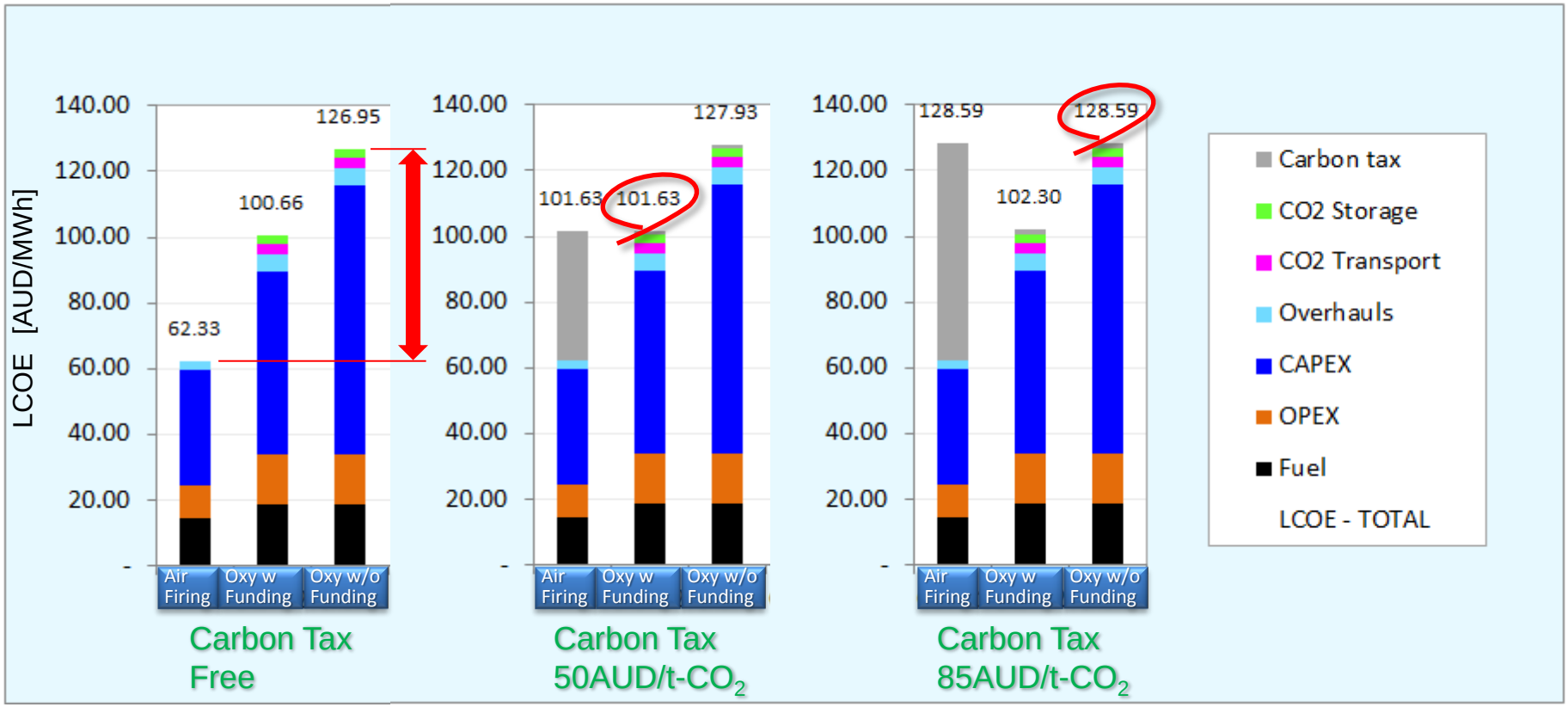


- ✓ Breakpoint is 50AUD/t-$CO_2$ with public support for CCS facility.
- ✓ Breakpoint is 85AUD/t-$CO_2$ without public support.

[Assumptions for LCOE Calculation]

- ✓ Economic life time; 30 years
- ✓ Plant availability; 85%
- ✓ Post-tax nominal WACC (Weighted Average Cost of Capital); 8.7%
- ✓ Income tax rate; 0%
- ✓ Inflation rate; 2.5% (2.5%x75% for fuel cost, 4.25% for Labor cost until 2018, then 2.5%)

# Utilization of Gases

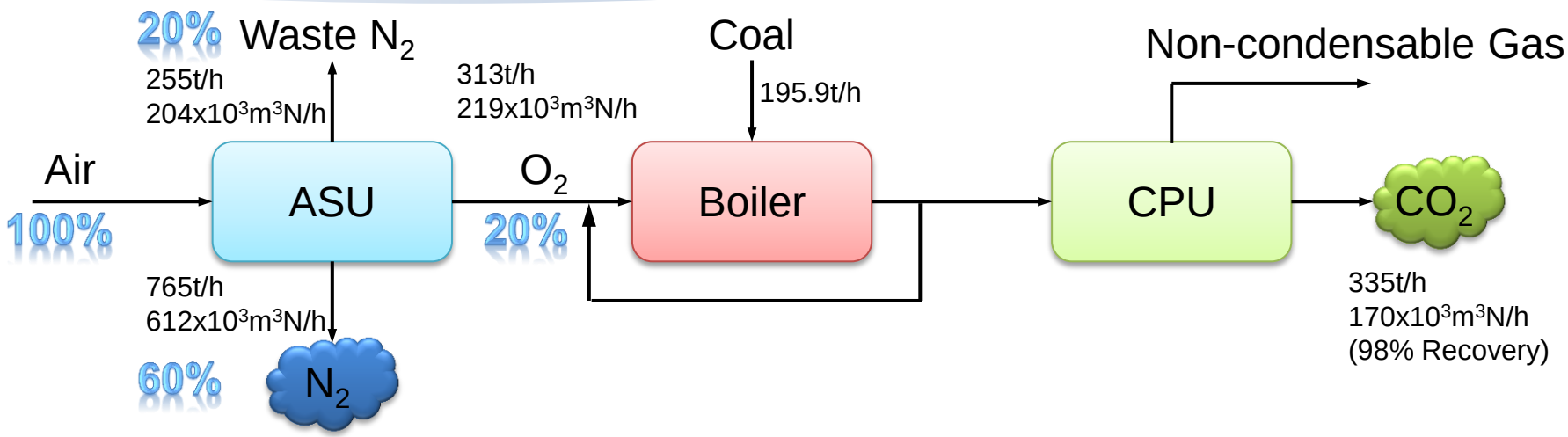


## Gas Quantity

- ✓ About 20% of supplied air is sent to the boiler as purified $O_2$ .
- ✓ About 20% of supplied air is used to regenerate molecular sieves in ASU.
- ✓ About 60% of supplied air can be utilized as gaseous $N_2$ .
  (Usually gaseous $N_2$ is used for ASU cooling)

## Conditions for $N_2$ Utilization

- ✓ 20% as middle pressure (0.37MPaG) $N_2$ and 40% as low pressure (0.01MPaG) $N_2$ can be utilized unless $N_2$ is used for ASU cooling.
- ✓ Additional power demand for cooling is equivalent for 3-4% of that for air compressor.

## $N_2$ Gas Purity

- ✓ $O_2$<1ppm.

# Utilization of Water

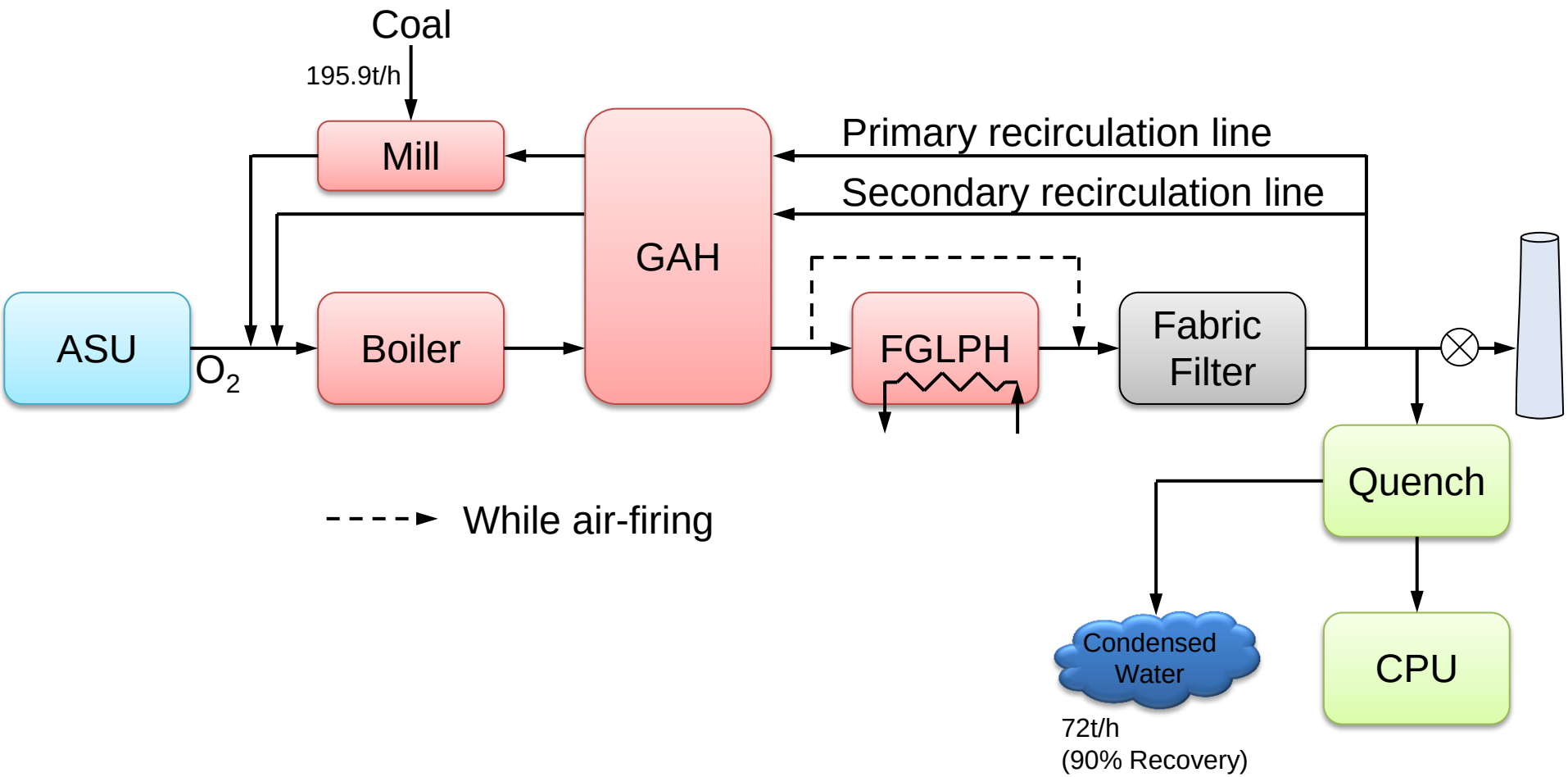


- ✓ Water treatment system is required to utilize condensed water.
- ✓ Specifications of water treatment system depends on usage of water.

# Economy

IHI
Realize your dreams

## 500MW Oxyfuel Power Plant

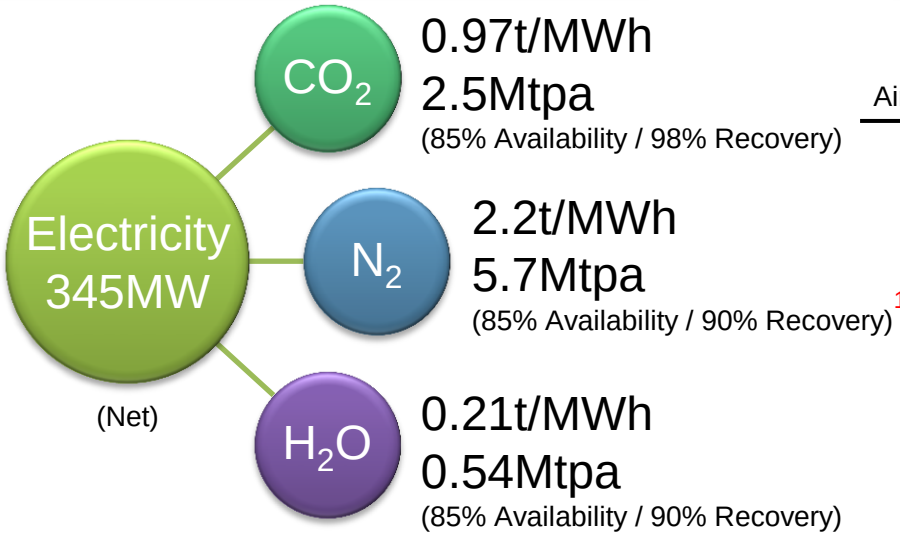


## Byproducts sales case for mining industry

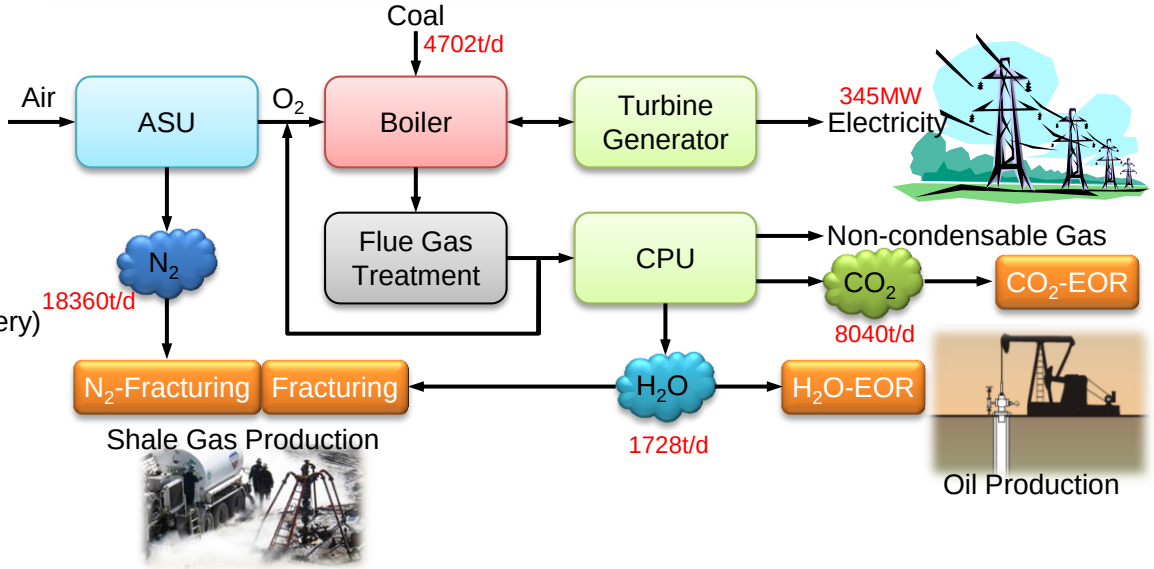


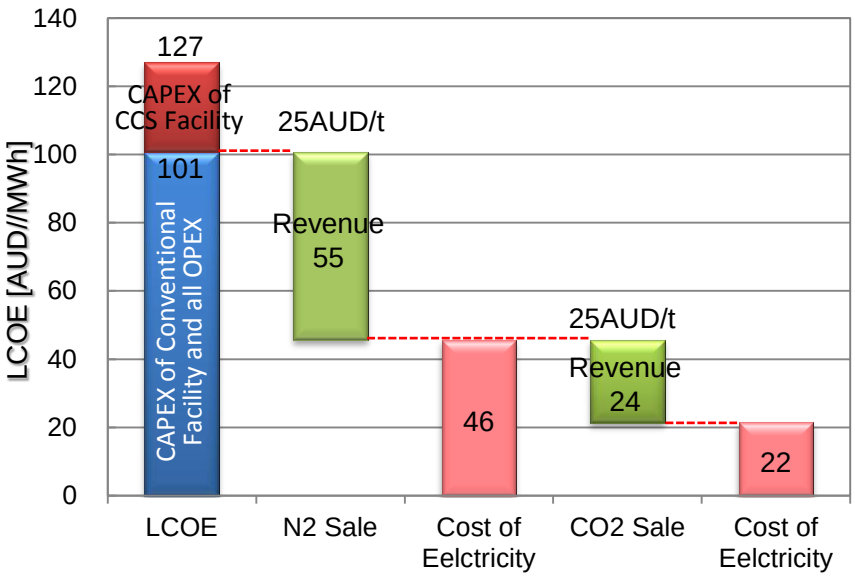


## Byproducts sales case for chemical plants

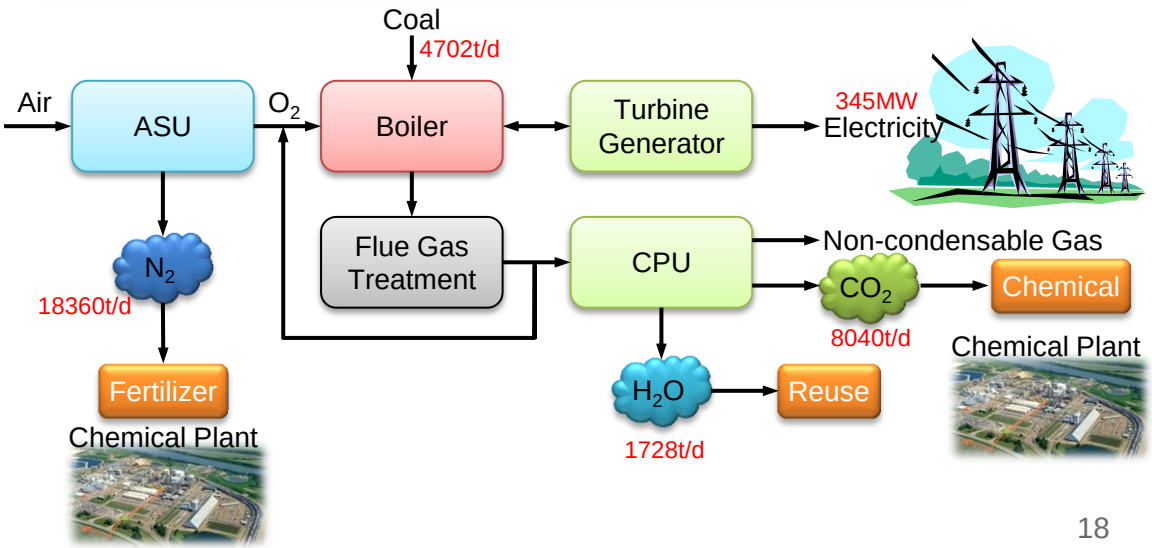

# Conclusions -Passage to 500MW Oxyfuel-

IHI
Realize your dreams

The Callide Oxyfuel Project is a collaborative project between Australia and Japan and is the biggest one in Australia not only in capacity but also in budget applying CCS technologies to coal-fired power plants. Because the deployment of the outcome from demonstration projects is vital, we conducted a feasibility study of the CCS deployment to Australia by use of oxyfuel technologies.

## Passage to 500MW Oxyfuel;

- Better business environment
  - ✓ Public funding system for CCS dedicated facility. (around 500MAUD for 500MW)
  - ✓ System to maintain high carbon pricing or Implementation to cover the deficit. (e.g., U.K. CfD (Contract for Difference))
  - ✓ Reliable, continuous and certain governmental policy and support.
- Study on technology and manufacturing
  - ✓ Cost reduction targeting on CAPEX. (Especially on ASU and CPU)
- Study on business model
  - ✓ Business scheme to sell electricity and gases by utility company or project body.
  - ✓ Innovation of industrial process for fertilizer or chemical products by low price $N_2$ (Finding invisible needs)
  - ✓ Viewpoint of a $N_2$ and $CO_2$ producing plant with a function to supply electricity.

# Acknowledgement

This work was supported by New Energy and Industrial Technology Development Organization (NEDO).

*Thank you for your attention.*