Ponferrada, 9th-13th September 2013

Validation of a Fuel Reactor Model for In-situ Gasification Chemical Looping Combustion

A. Abad, Juan Adánez, Luis F. de Diego, Pilar Gayán, Francisco García-Labiano

Instituto de Carboquímica (ICB-CSIC), Zaragoza, Spain

Anders Lyngfelt

Chalmers Tekniska Högskola, Göteborg, Sweden

abad@icb.csic.es

EUROPEAN COMMISSION
RESEARCH DIRECTORATE-GENERAL
Research Fund for Coal and Steel

Introduction

In situ Gasification Chemical Looping Combustion of Coal (*i*G-CLC)

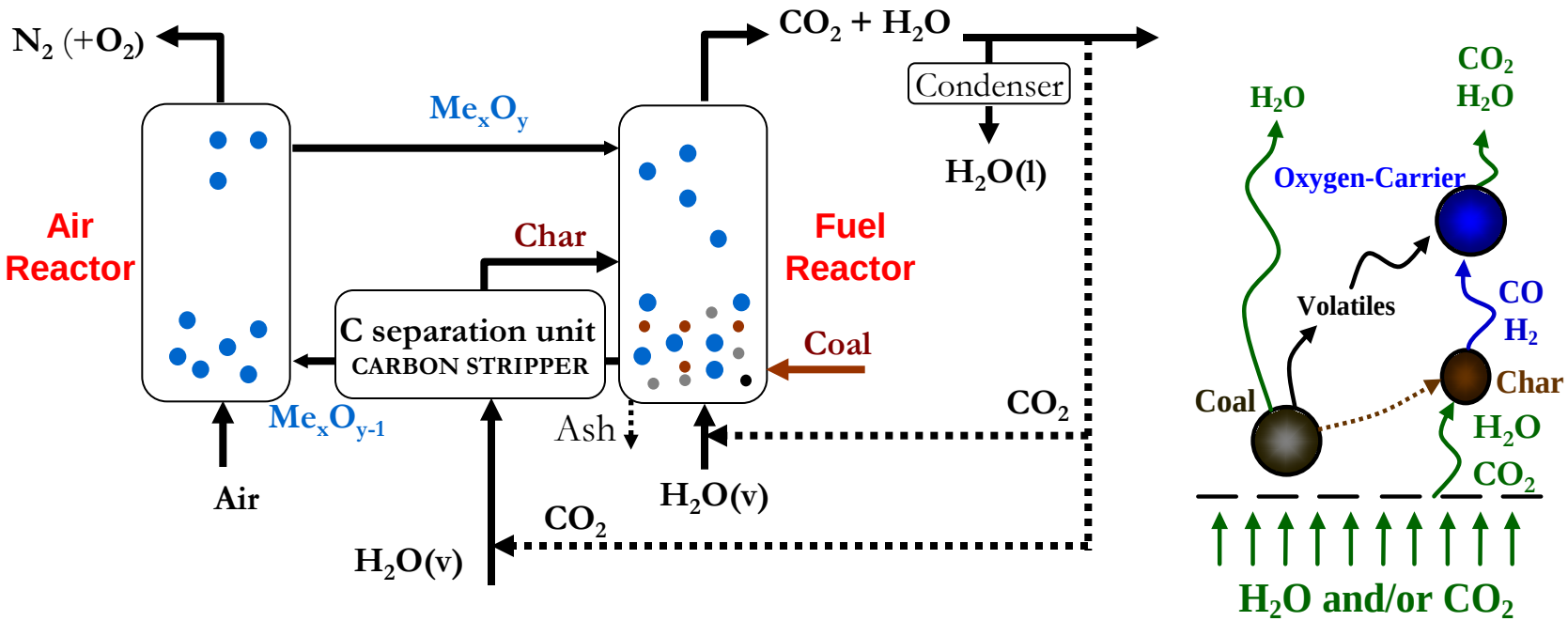

What is intended?

- **High CO_2 capture rates:** necessity of a CARBON STRIPPER
- **High combustion efficiency:** to minimize unburnt compounds exiting the fuel reactor together CO_2 and H_2O

} **Performance of the Fuel Reactor + Carbon Stripper**

Introduction

*i*G-CLC: Status of the art

- **Oxygen carriers**
  - Ilmenite
  - Hematite
  - Iron ore
  - Bauxite waste: Fe-ESF
  - Manganese ore
  - $CaSO_4$
- **Solid fuels**
  - Petcoke
  - Anthracite
  - Bituminous coals
  - Lignite
  - Biomass

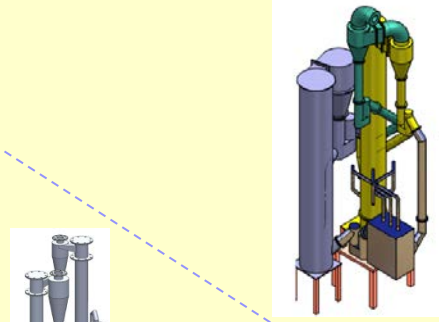

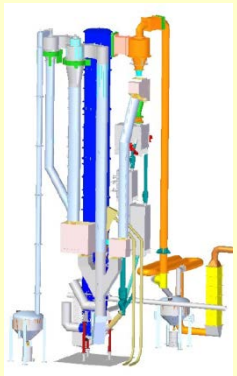

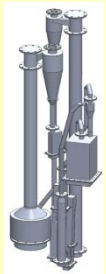

1 MW_{th}
Darmstadt
Germany

3 MW_{th}
Alstom
USA

100 kW_{th}
Chalmers UT
Sweden

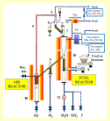

0.5 kW_{th}
ICB-CSIC
Spain

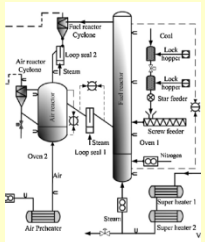

50 kW_{th} (5atm)
Sotheast U
China

Increasing
size

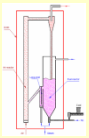

1 kW_{th}
Southeast U
China

25 kW_{th}
Hamburg UT
Germany

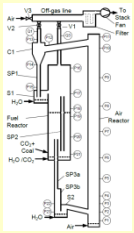

10 kW_{th}
Chalmers UT
Sweden

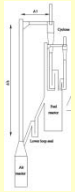

10 kW_{th}
IFP
France

10 kW_{th}
Southeast U
China

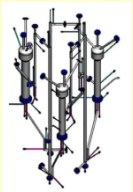

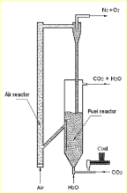

Introduction

*i*G-CLC: Status of the art

➢ CO_2 capture efficiency

- High CO_2 capture rate values are reached when a carbon separation system (CSS) is implemented

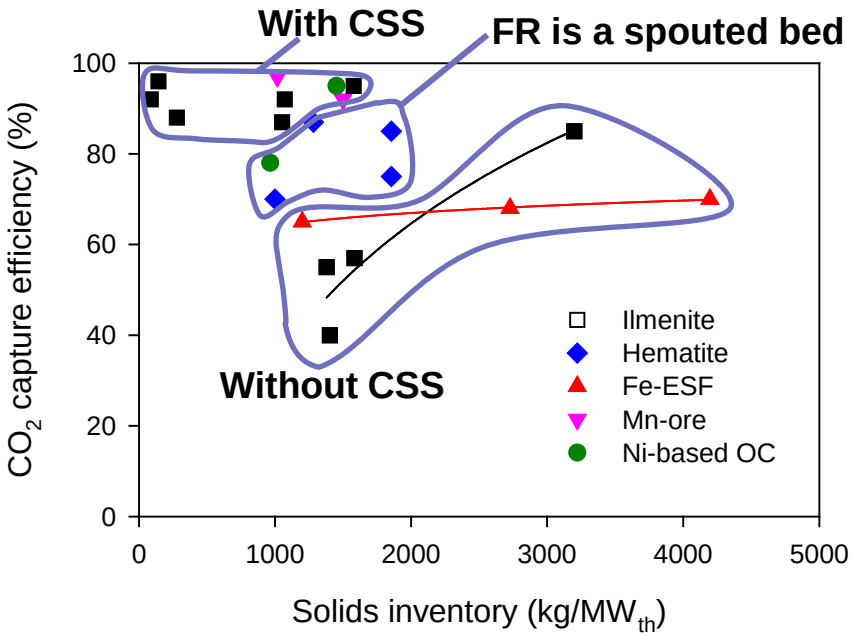

➢ Combustion efficiency

- Usually evaluated by the "Oxygen demand" defined by:

$$\Omega_T = 1 - \eta_{comb} = \frac{\text{Oxygen for complete combustion of FR gas}}{\text{Oxygen demanded by the coal}}$$

- Complete combustion is not reached
- Oxygen demand decreases if:
  - the solids inventory increased
  - the oxygen carrier reactivity increased

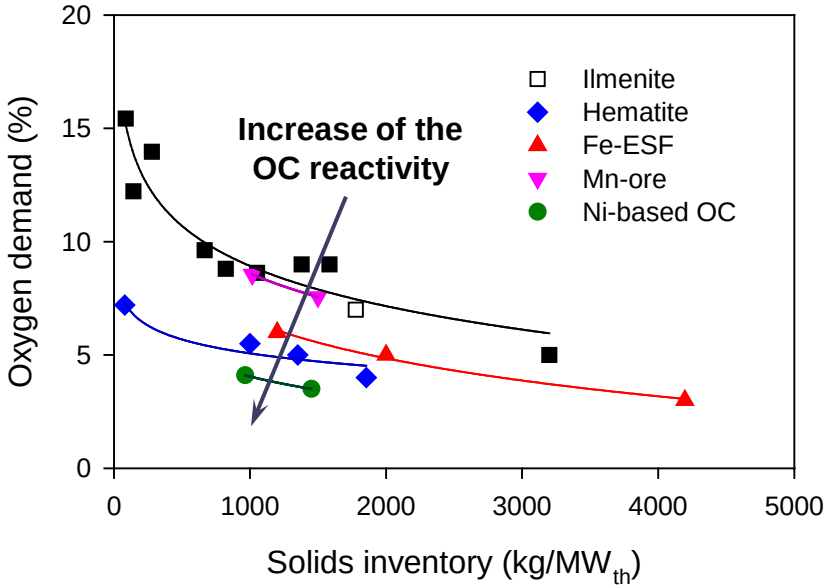

Objective

To identify key operating parameters and design options to minimize the oxygen demand in a *i*G-CLC process

- **Development of a mathematical model for the coupled fuel reactor and carbon stripper**
- **Validation of the model against experimental results in a CLC unit analyzing:**
  - **CO_2 capture efficiency**
  - **Oxygen demand**
- **Process simulation of different options**

Modelling FR and CS

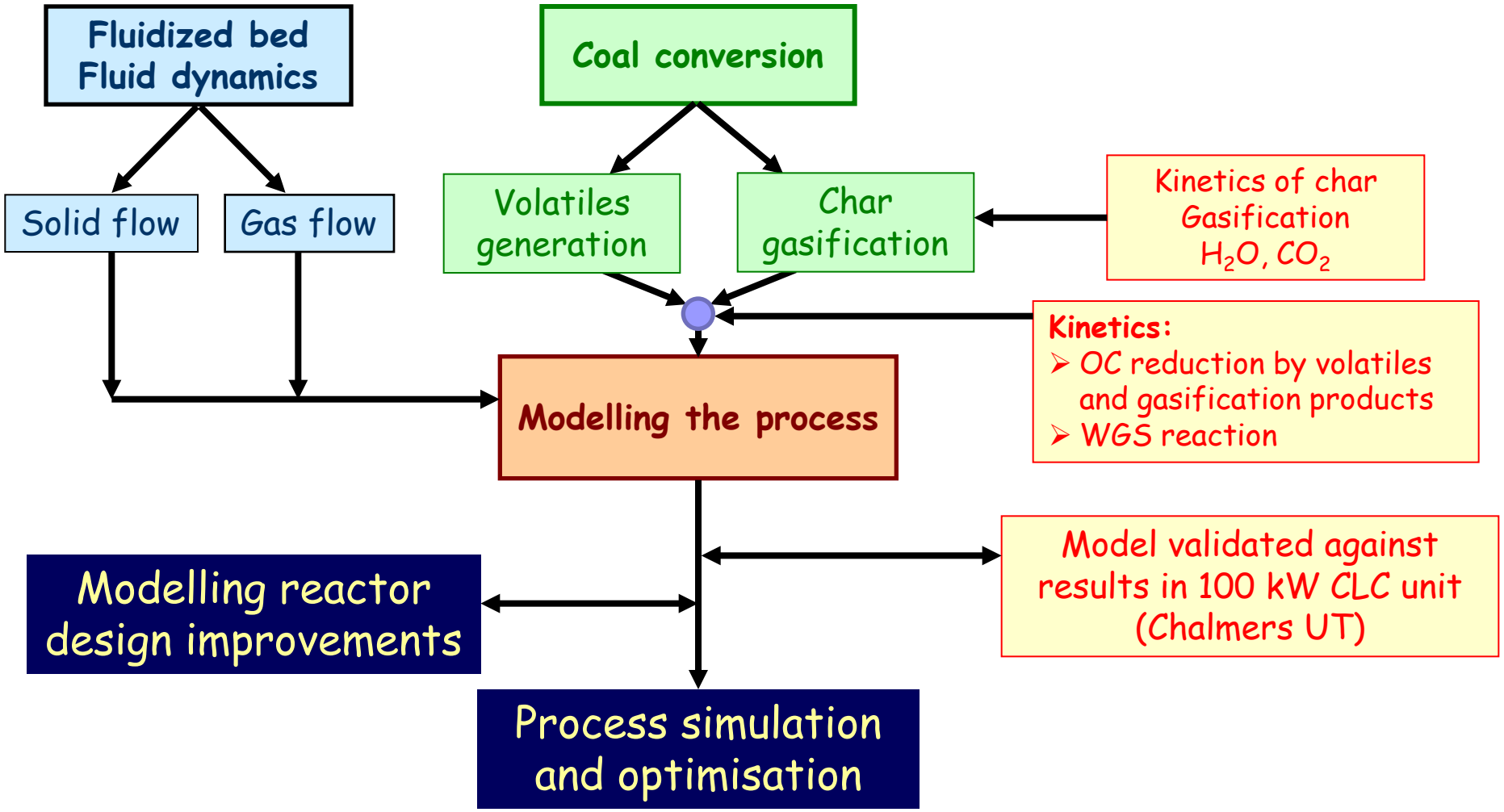

FLUID DYNAMICS: high velocity fluidized bed (FR)

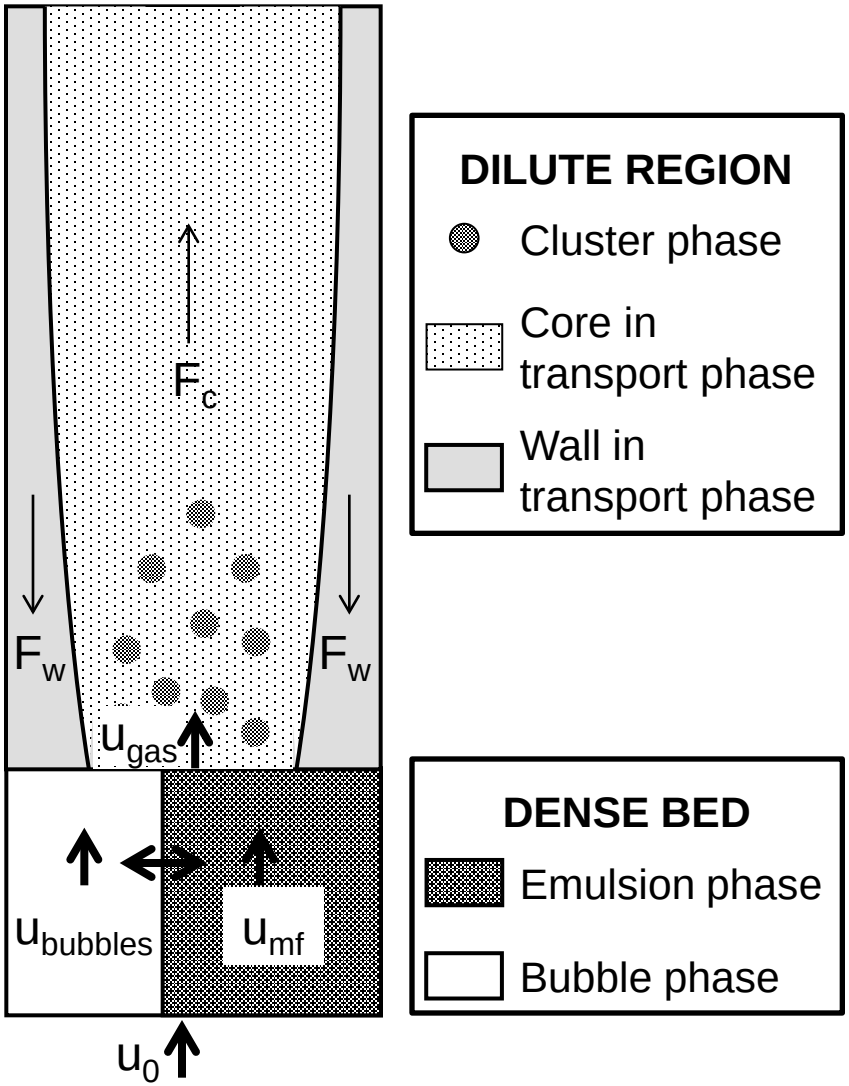

➢ Dense bed

- Two phases: bubble/emulsion
- Plug flow gas in each region
- Gas exchange between phases
- Solids are in perfect mixing

➢ Cluster phase in splash

- Plug flow gas
- Solids are in perfect mixing
- Exponential decay of solids

➢ Transport phase

- Core-annulus structure
- Exponential decay of solids

MASS BALANCE: Kinetics of chemical reactions

Coal reactions

Devolatilization(1) : Coal $\longrightarrow$ Char(C) + Volatiles

Gasification(2):

$$C + H_2O \longrightarrow CO + H_2$$

$$C + CO_2 \longrightarrow 2\,CO$$

Reactions involving oxygen carrier(2)

$$MeO + CO \longrightarrow CO_2 + Me$$

$$MeO + H_2 \longrightarrow H_2O + Me$$

$$4\,MeO + CH_4 \longrightarrow CO_2 + 2\,H_2O + 4\,Me$$

WGS reaction(3)

$$CO + H_2O \longleftrightarrow CO_2 + H_2$$

(1) It was assumed instantaneous devolatilization in the feeding point of coal
Volatiles composition by Matthesius et al. J.S.Afr.Inst.Min.Metall. 1987, 87, 157.

(2) Kinetics determined in ICB-CSIC by TGA.

(3) Kinetics of the fWGSR by Graven and Long. J.Am.Chem.Soc.1954,76,2602.

Validation of the Model

100 kW_{th} CLC unit at CUT(*)

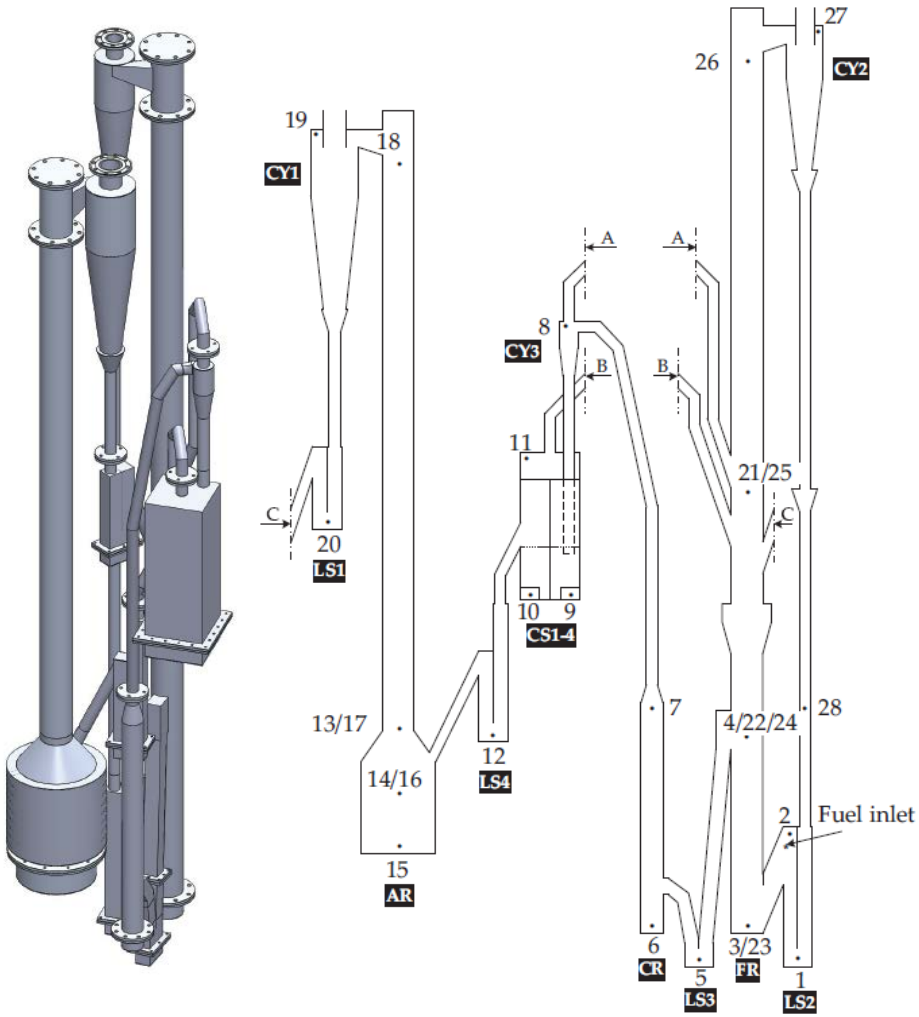

Input data

Oxygen carrier	Solid fuel
Norwegian ILMENITE (170μm)	"El Cerrejón" bituminous coal, Colombia (50μm)

Fuel Reactor geometry	
Height (m)	5
Diameter (m)	0.154

11 experimental conditions	
Temperature (ºC)	950-980
Pressure drop (kPa)	15-23
Steam flow (Nm^3/h)	6-18
Solids circulation rate (kg/h)	900-3210

(*) Markström et al. Int.J.Greenhouse Gas Control, 2013,15,150

Validation of the Model

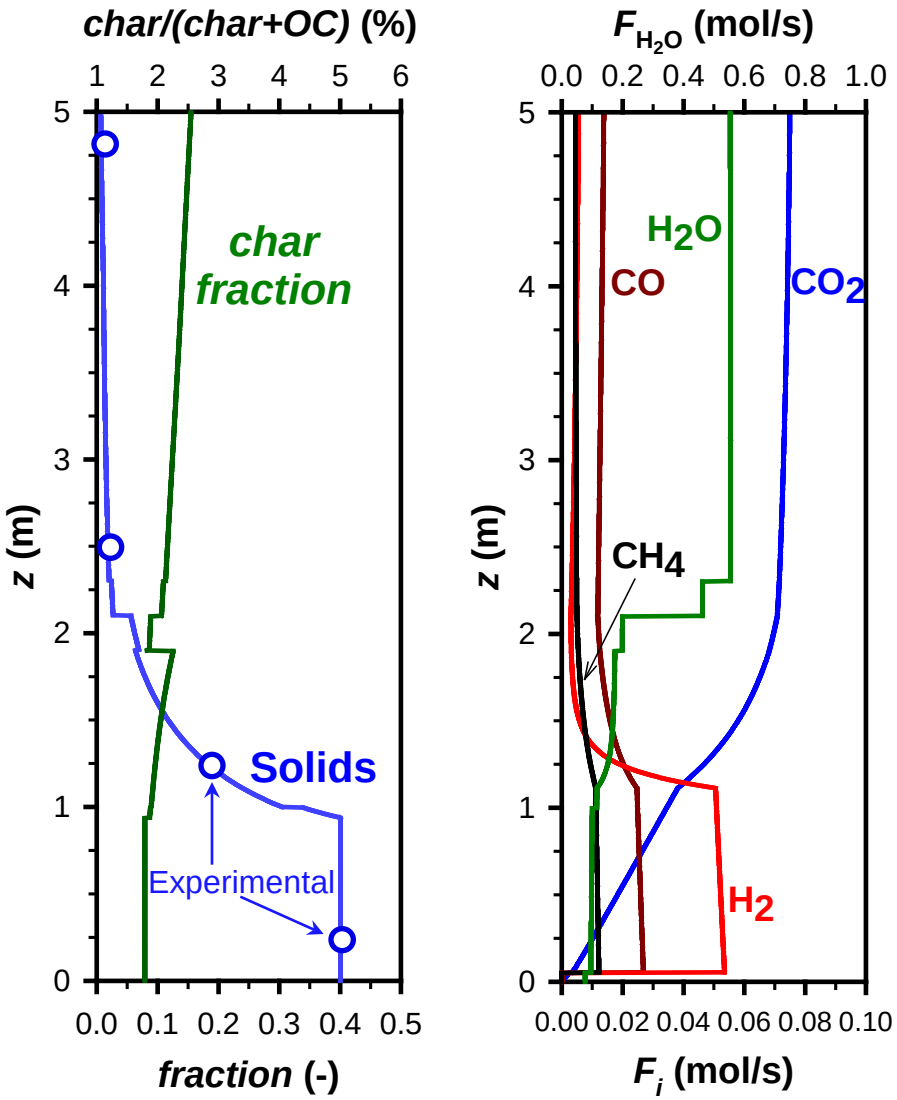

Output results

- Axial profiles
  - Axial profile of solids concentration is properly predicted by the fluid dynamic model
  - Char fraction increases with heigth
  - CO and H_2 flows increase with height
- Oxygen carrier conversion
- Char conversion
- Concentration of gases at exit
- Oxygen demand
- CO_2 capture efficiency

Validation of the Model

Model predictions vs. Experimental results

Experimental
Model prediction

Gas concentration from the FR

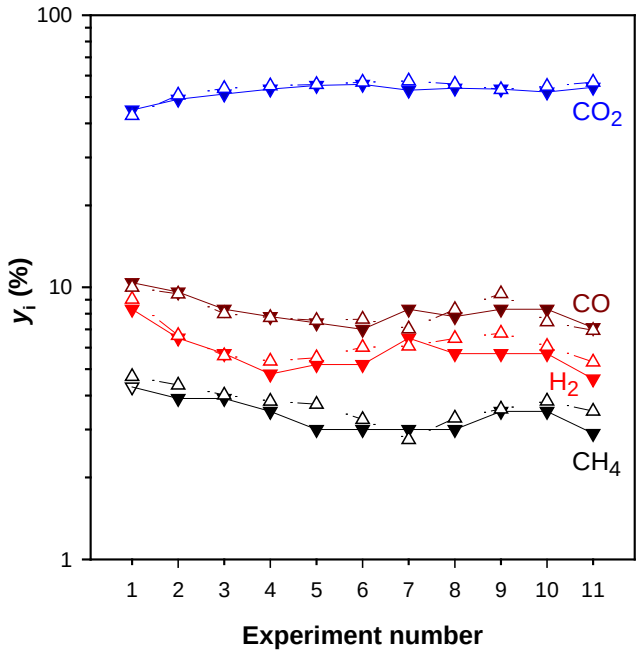

Oxygen demand and CO_2 capture

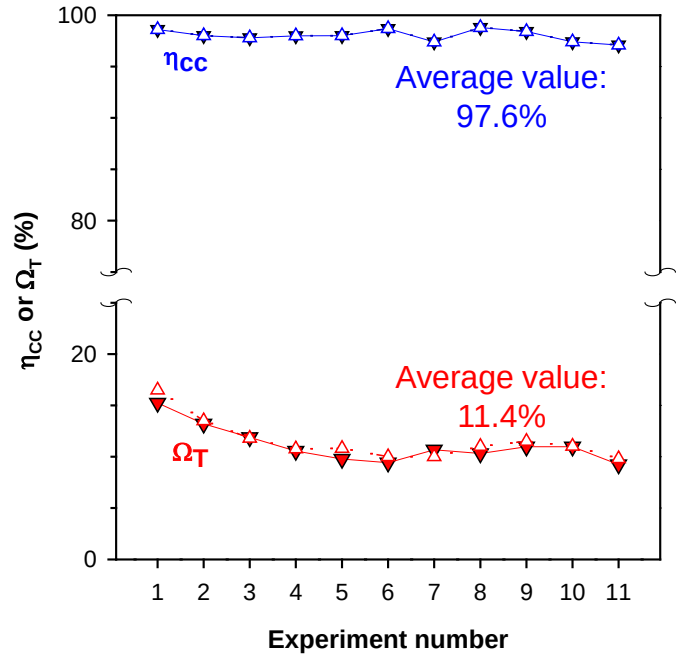

- Good fitting of experimental results
- Tendency is predicted
- There are always unburnt compounds exiting from the Fuel Reactor

➢ η_{CS} is calculated to fit the reported η_{CC} value in every experimental condition

- The value for the efficiency of the carbon stripper is 99.3%!!

Options to decrease the oxygen demand:

To optimize operating conditions

- Temperature, solids inventory, solids circulation rate

To modify design of the CLC unit

- D-1: To improve the gas-solid contact by disposing internals in the dilute region of the fuel reactor
- D-2: To include a second fuel reactor fed by the exhaust gases
- D-3: To recycle exhaust gas to the fuel reactor or carbon stripper
- D-4: To separate unburnt compounds in connection with the purification of CO_2 and to send these gases to the fuel reactor

Effect of operating conditions

- It is preferable to operate at higher temperature and solids inventary as possible
- The solids circulation flow must be chosen by a tradeoff between η_{CC} and Ω_T

Reference conditions

- Temperature: 1000°C
- Solids inventory in FR: 1000 kg/MW_{th}
- Solids circulation flow: 4 kg/s per MW_{th}
- Efficiency of carbon separation system: 99%

Oxygen demand: 11.4%

CO_2 capture efficiency: 96.4%

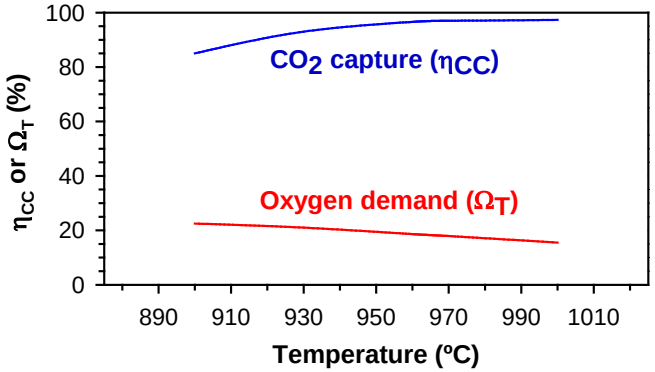

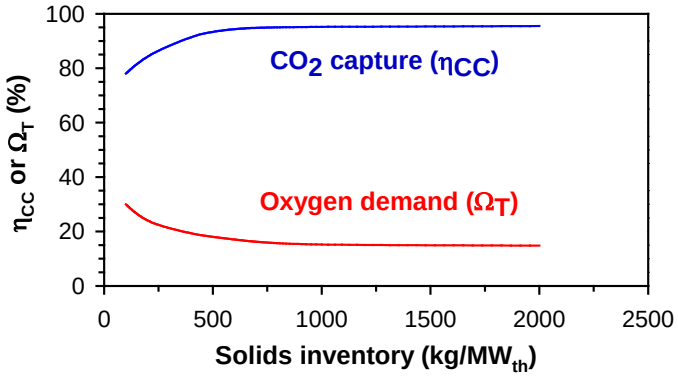

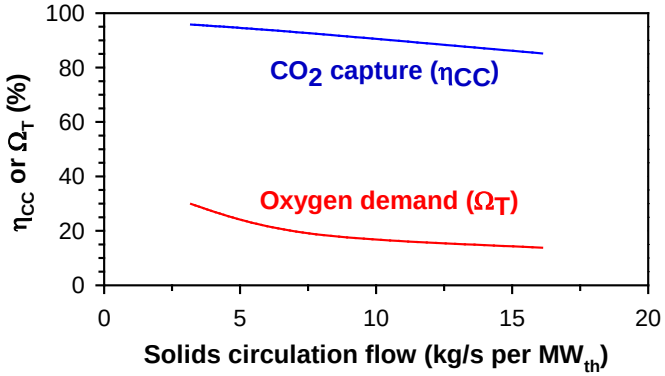

D-1: to insert internals in the dilute region

Factors affecting the solids distribution

- Distance between internals: Δh
- Incremental in solids concentration: f_S

For Δh = 0.75 m and f_S = 2

- Oxygen demand: 7.5%
- CO_2 capture efficiency: 95.1%

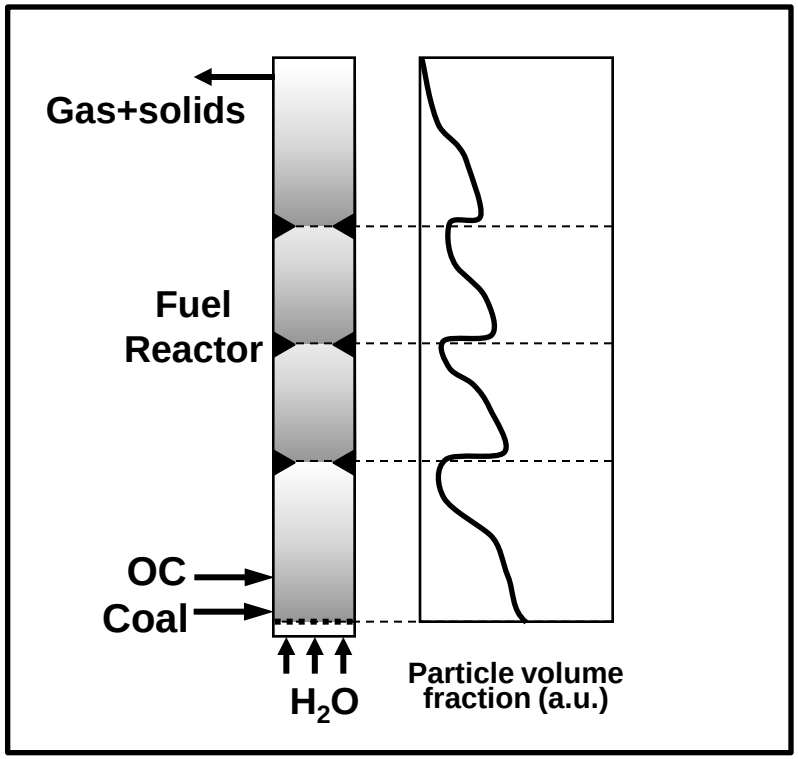

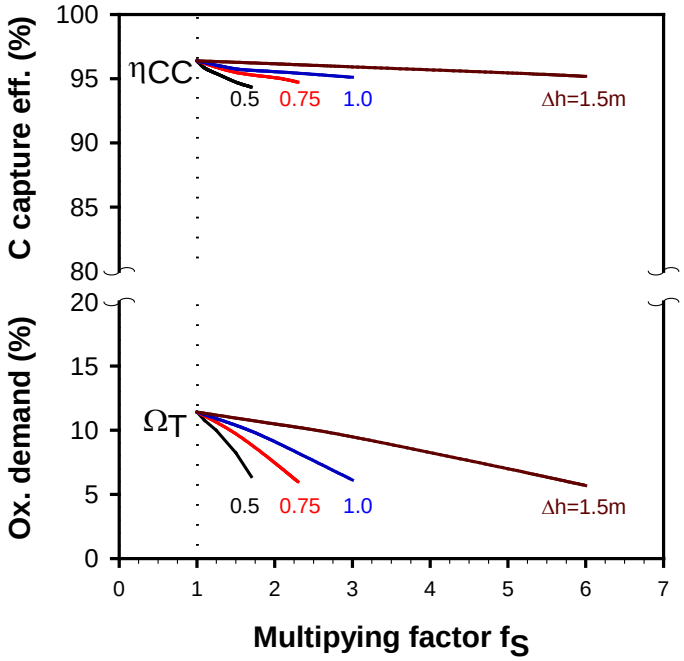

Reference conditions:
Oxygen demand: 11.4%
CO_2 capture efficiency: 96.4%

D-2: to include a secondary fuel reactor

Modeling the secondary fuel reactor

- High-velocity fluidized bed
- Similar model to the fuel reactor:
  - no char
  - fuel gas fed through the distributor plate

For m_{FR-2} = 500 kg/MW_{th}

- Oxygen demand: 1.5%
- CO_2 capture efficiency: 96.4%

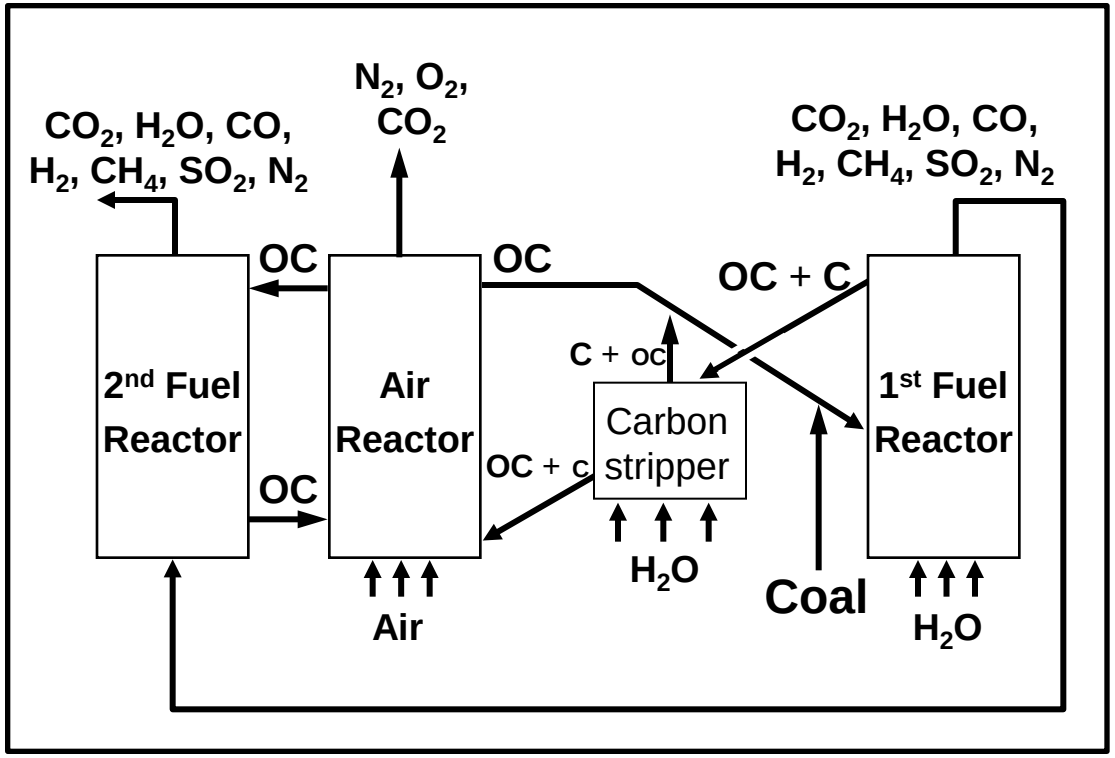

Reference conditions:
Oxygen demand: 11.4%
CO_2 capture efficiency: 96.4%

D-3A: to recycle exhaust gas to fuel reactor

Recycle conditions

- Steam in FR is replaced by recirculated gases
- Recirculation of dry gases
- The recirculation ratio is varied: $\phi_{g,dry} = \frac{F_{rec,dry}}{F_{outFR,dry}}$

For $\phi_{g,dry}$ = 0.85

- Oxygen demand: 3.7%
- CO_2 capture efficiency: 97.0%

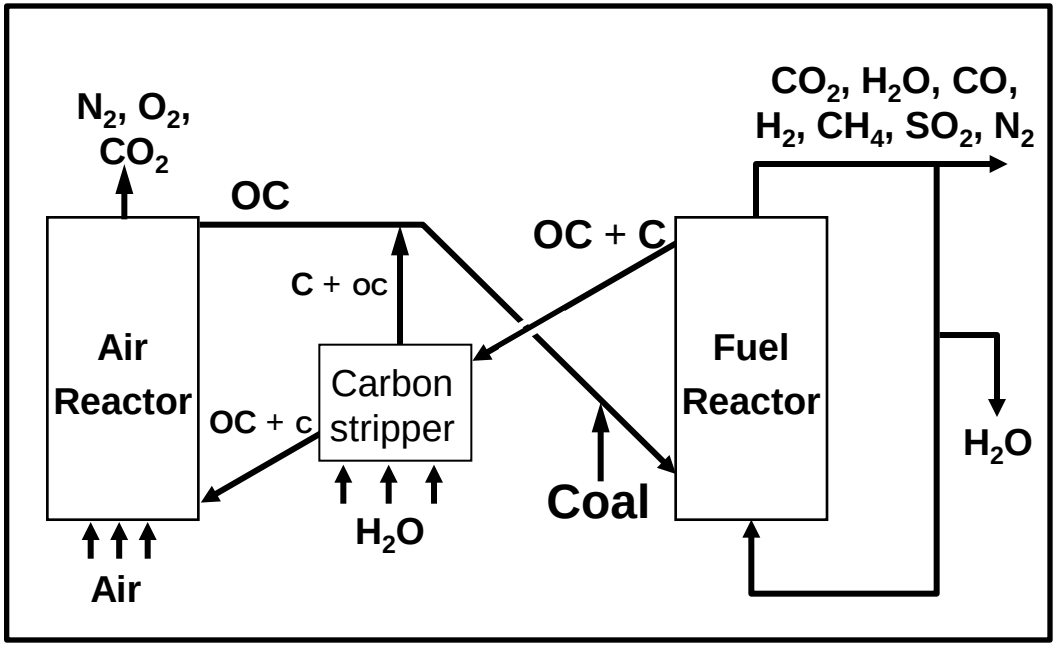

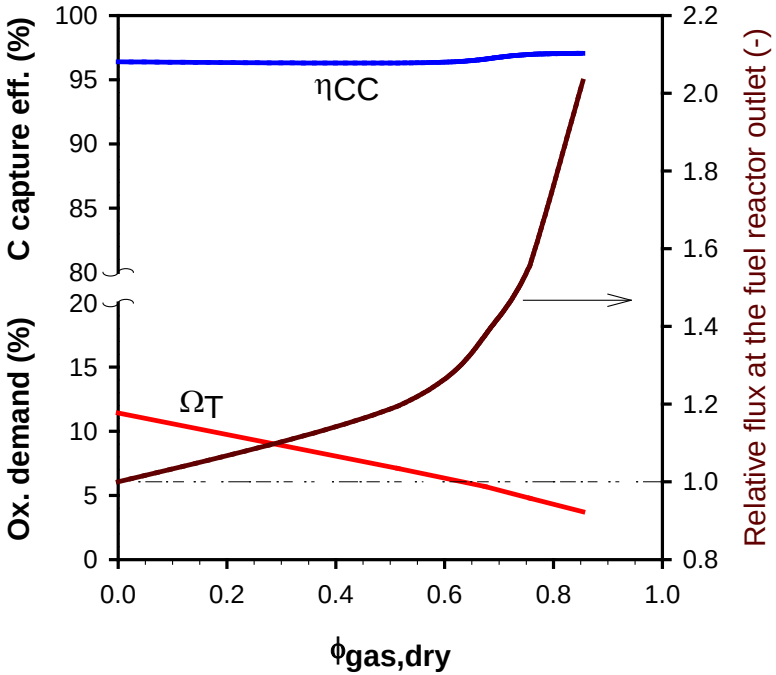

Reference conditions:
Oxygen demand: 11.4%
CO_2 capture efficiency: 96.4%

D-3B: to recycle exhaust gas to carbon stripper

Recycle conditions

- The steam flow is replaced by recirculated flow
- Recirculated flow is equal to steam flow to CS

- Oxygen demand: 3.0%
- CO_2 capture efficiency: 95.5%

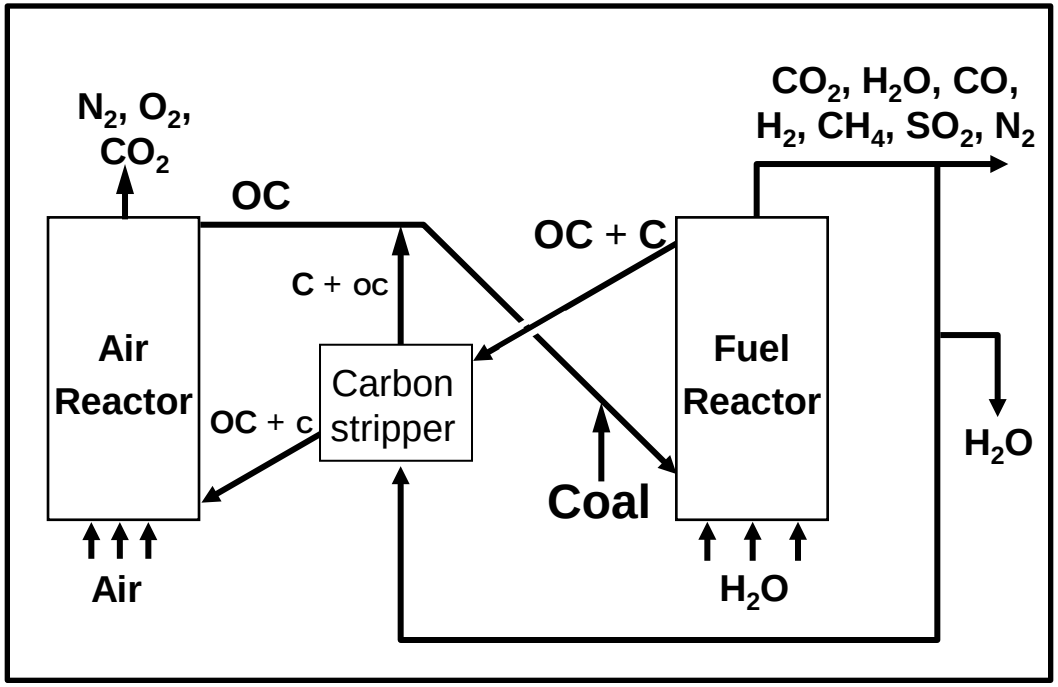

Reference conditions:
Oxygen demand: 11.4%
CO_2 capture efficiency: 96.4%

D-4: to recycle unburnt compouds to the fuel reactor

Recycle conditions

- Ideal CO_2 separation is assumed during purification step
- Dry and CO_2 free recirculated flow
- Purge stream is required to avoid accumulation of N_2 coming from coal

- Oxygen demand: 6.6%
- CO_2 capture efficiency: 96.4%

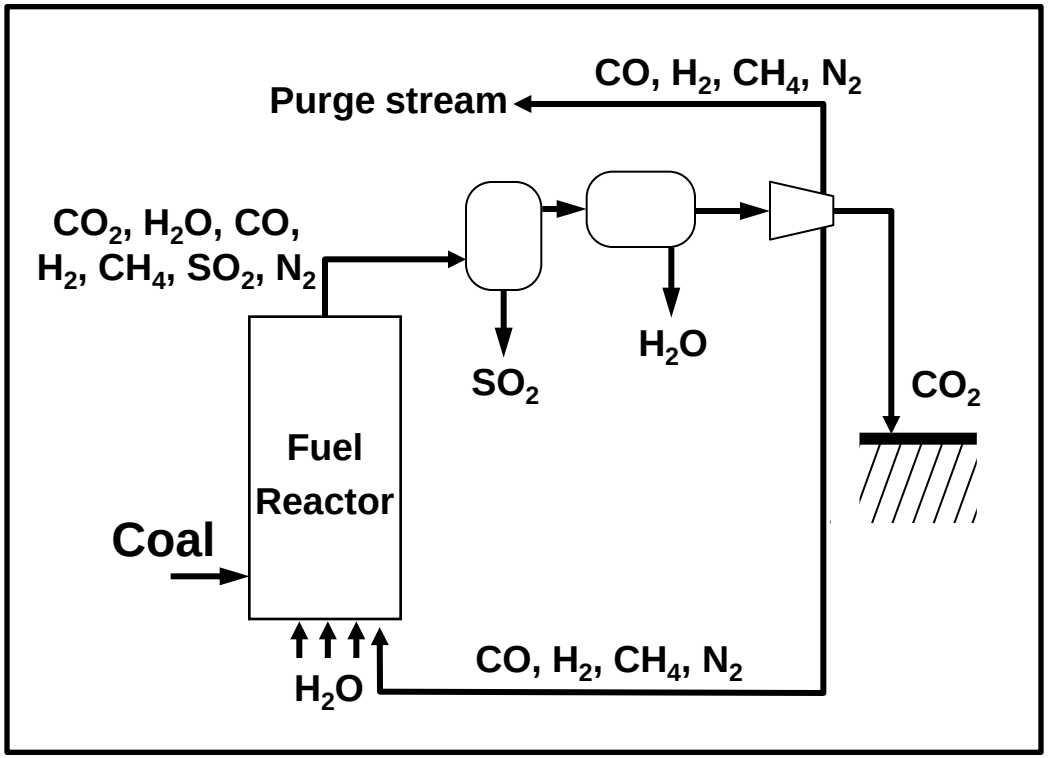

Reference conditions:
Oxygen demand: 11.4%
CO_2 capture efficiency: 96.4%

Comparing results

Comparison of the results by using the Coefficient of Variation (CV) of oxygen demand or CO_2 capture efficiency

$$CV(\%) = 100\frac{x_{new} - x_{ref}}{x_{ref}}$$

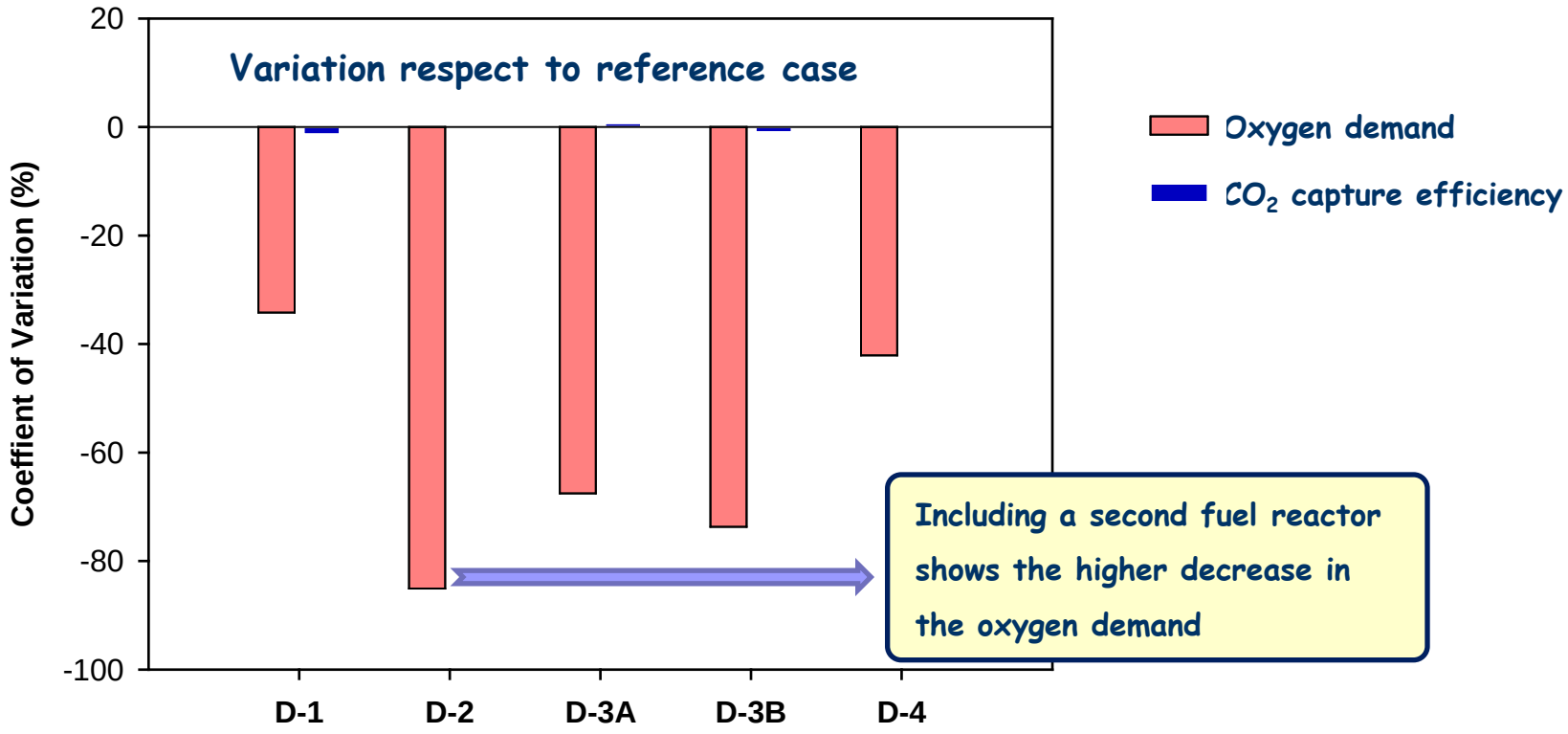

Including a second fuel reactor shows the higher decrease in the oxygen demand

System improvements

But… there is a second reactor in the iG-CLC unit: The Carbon Stripper!

- The carbon stripper is used as a secondary FR
- There is not recirculation of gases

- Oxygen demand: 0.9%
- CO_2 capture efficiency: 98.8%

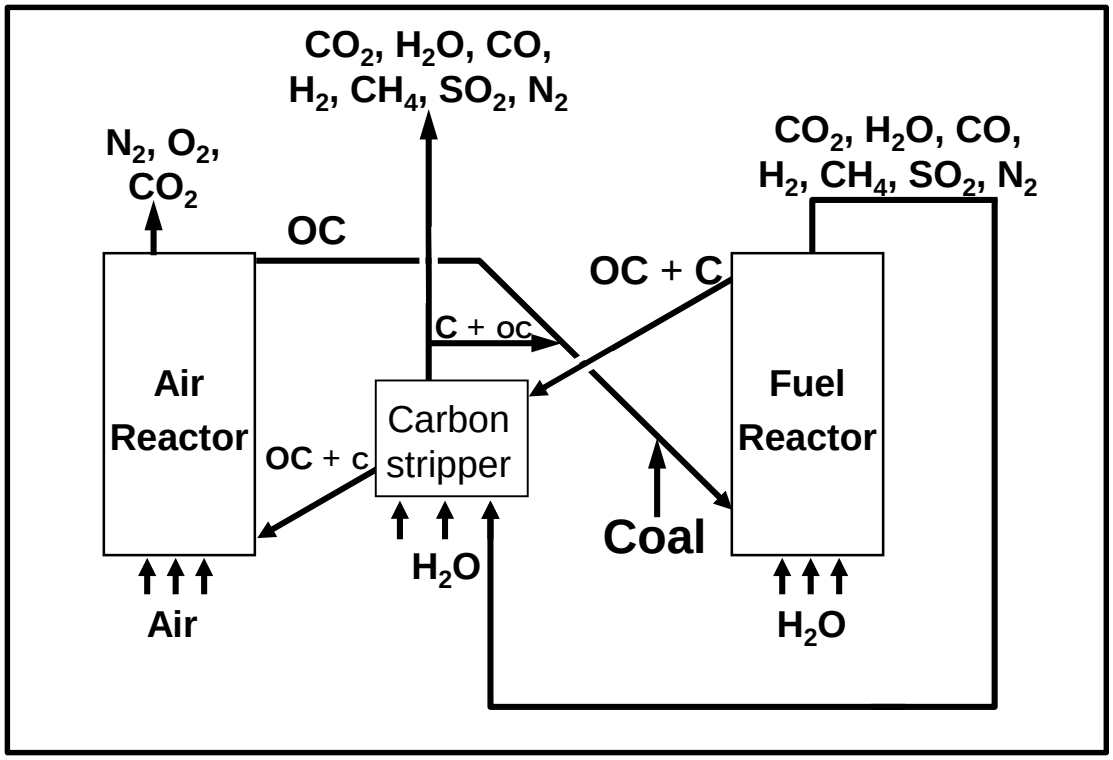

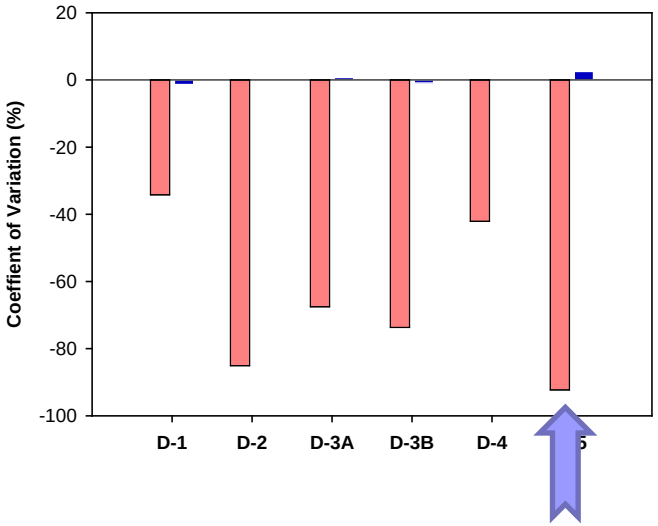

- The largest drop in oxygen demand

Reference conditions:
Oxygen demand: 11.4%
CO_2 capture efficiency: 96.4%

Summary & Conclusions

- A theoretical model for the couple fuel reactor and carbon striper model has been validated against experimental results obtained in the 100 kW_{th} CLC unit

- A temperature in the fuel reactor of 1000°C and a solids inventory of 1000 kg/MW_{th} was considered optimal and factible conditions to decrease the oxygen demand, but unburnt compounds are still in gases from the fuel reactor

- Different design options were evaluated to improve the combustion efficiency of the process: using the carbon stripper as a secondary fuel reactor is proposed as an option to maximize the combustion efficiency

Ponferrada, 9th-13th September 2013

Validation of a Fuel Reactor Model for In-situ Gasification Chemical Looping Combustion

Thanks

A. Abad, Juan Adánez, Luis F. de Diego, Pilar Gayán, Francisco García-Labiano

Anders Lyngfelt

abad@icb.csic.es

INSTITUTO DE CARBOQUIMICA

CSIC CONSEJO SUPERIOR DE INVESTIGACIONES CIENTÍFICAS

GOBIERNO DE ESPAÑA MINISTERIO DE ECONOMÍA Y COMPETITIVIDAD

EUROPEAN COMMISSION RESEARCH DIRECTORATE-GENERAL Research Fund for Coal and Steel

Research Fund for Coal & Steel

ECLAIR CLC

ACCLAIM