Process Integration in Coal based Oxy-Combustion Power Plants

Chao Fu, Truls Gundersen

Department of Energy and Process Engineering (EPT),

Norwegian University of Science and Technology (NTNU),

Trondheim, Norway

Thermal efficiency penalty for oxy-combustion*

- **Air fired case: 39.8% (HHV: higher heating value)**
- **Oxy-combustion case: 29.8%**

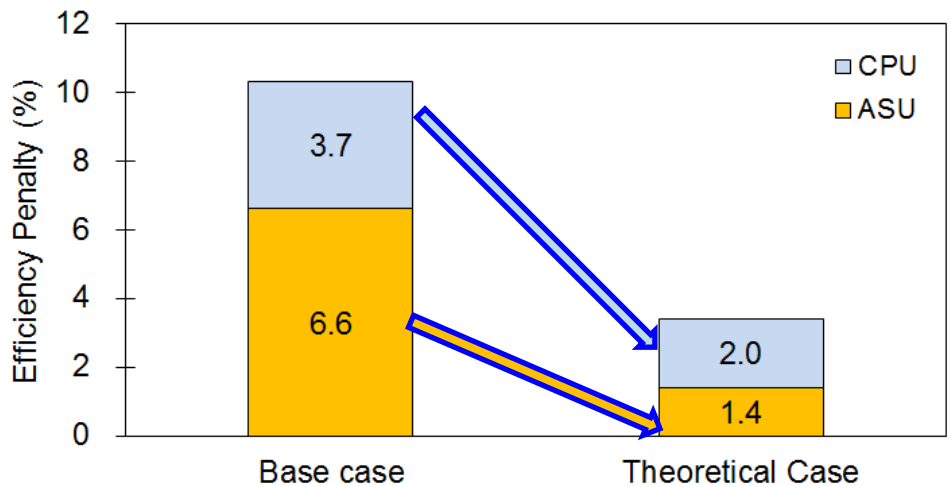

- **An expected target (by the year 2020): penalty < 6% points**
  - **Optimal design of CO_2-enriched boilers: O_2 excess, recycling of flue gas**
  - **Technology shift for ASU: membrane separation**
  - **Process integration (PI): optimal design of ASU and CPU, heat integration**

** Chao Fu, Truls Gundersen. Submitted to Energy&Fuels, 2013*

PI study on the compression heat

- • ••••• ••• ••• ›•• •• •••

- **Compression heat: removed by cooling water and wasted**

- **Possible ways for utilizing compression heat**
  - **Regeneration of molecular sieves in the ASU and the CPU**
  - **Preheating recycled flue gas**
  - **Preheating boiler feedwater in the steam cycle**

- **Challenges for the integration study**
  - **Optimal supply and target temperatures of the compressed gases**
  - **Reasonable temperature differences in gas/water heat exchangers**
  - **New configuration of the steam cycle (steam extraction, feedwater heaters, steam preheating process)**
  - **Varying compressor efficiency**
  - **Site location and investment cost**

Decompose the heat loads

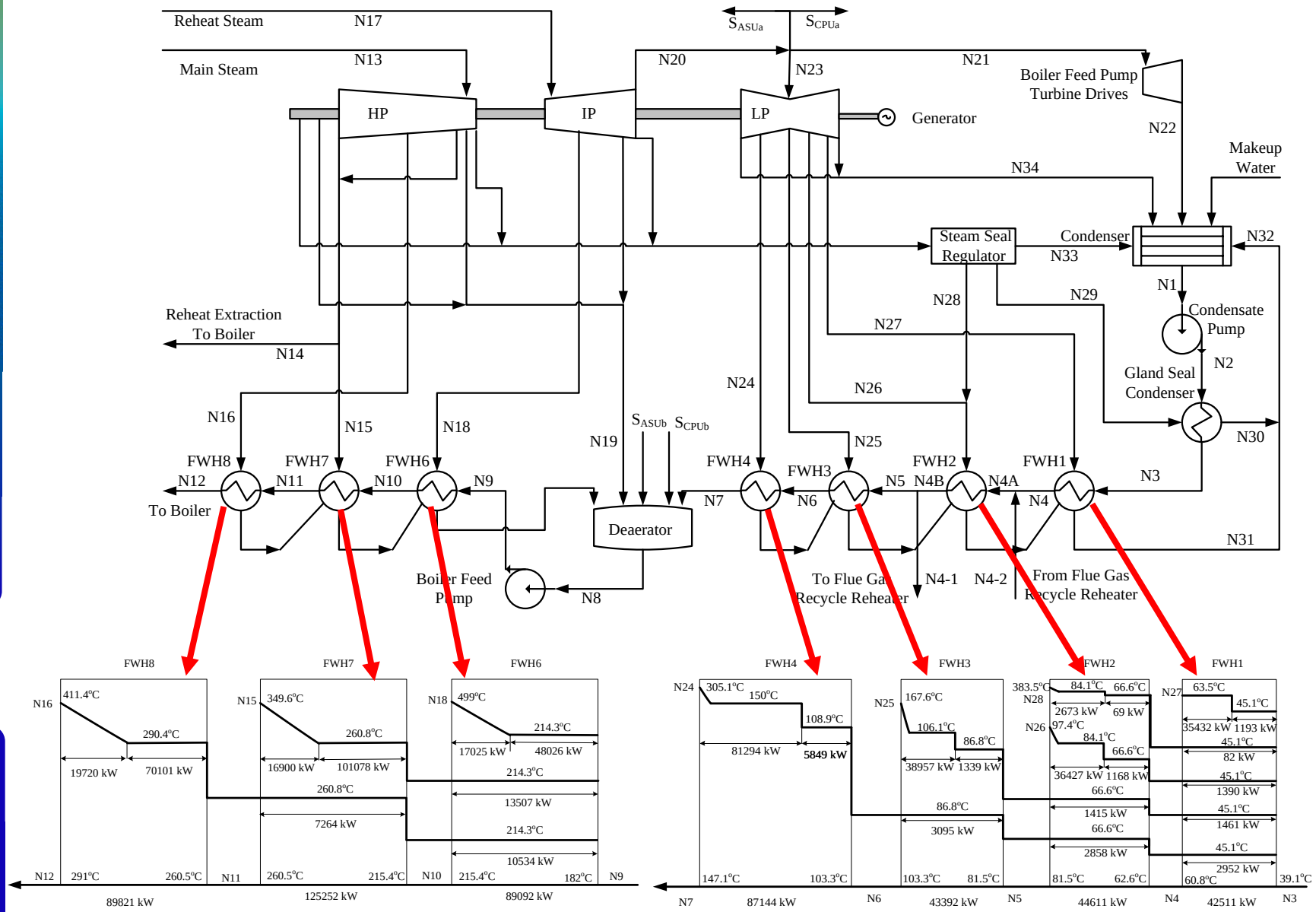

Illustration of heat contribution (e.g. FWH2)

N28: steam from SSR

N26: steam extracted

N25: steam condensate

N24: steam condensate

N4 & N5: BFW

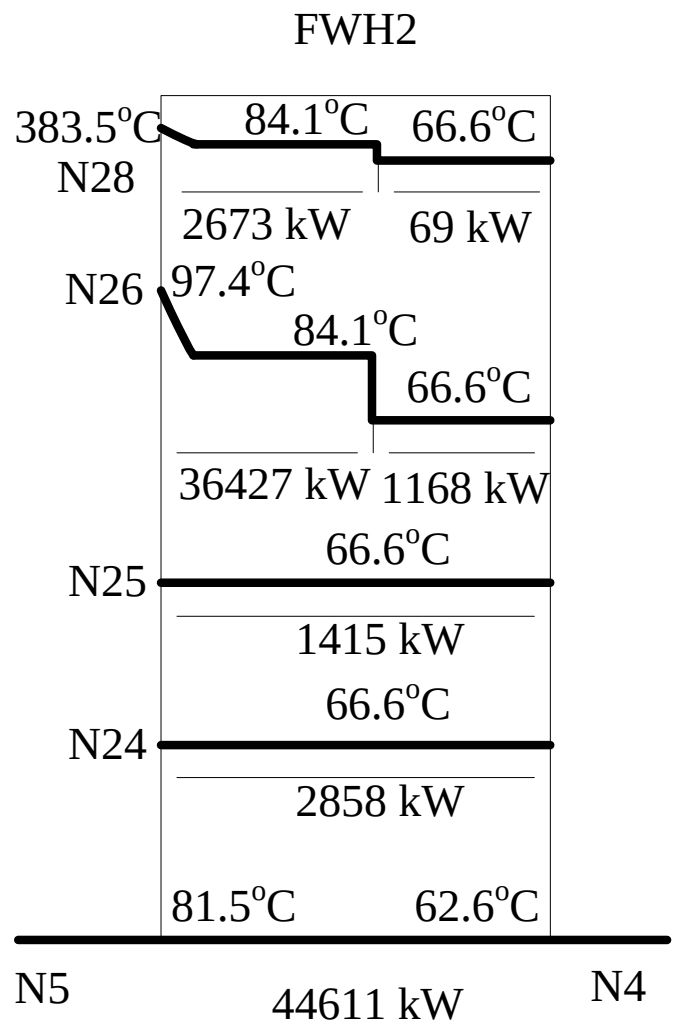

Integrating the ASU with the steam cycle

- **Case studies:**
  - **Case 1: three-stage compression ("isothermal" compression)**
  - **Case 2: two-stage compression**
  - **Case 3: one-stage compression (adiabatic compression)**

- **Steps for the integration:**

(1) Calculate the supply temperature of compression heat

(2) Draw the Grand Composite Curve (GCC) that includes compression heat and the heating demand of boiler feedwater

(3) Calculate the demand for steam extraction

(4) Further cooling of the compressed gases by cooling water

Case 1: three-stage compression

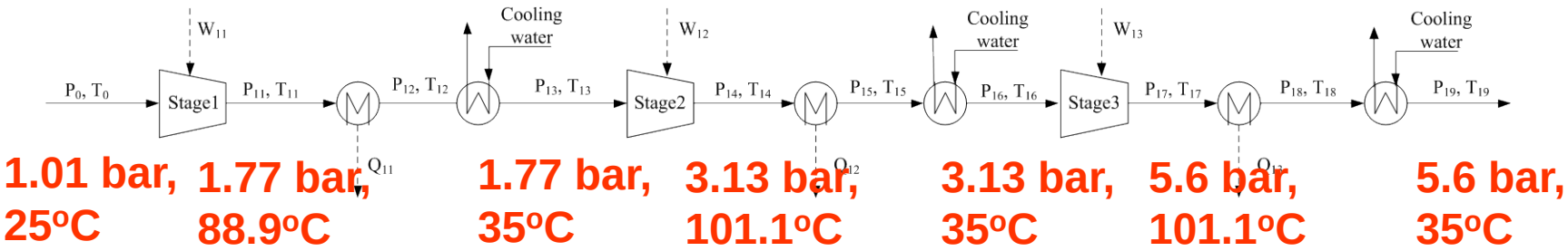

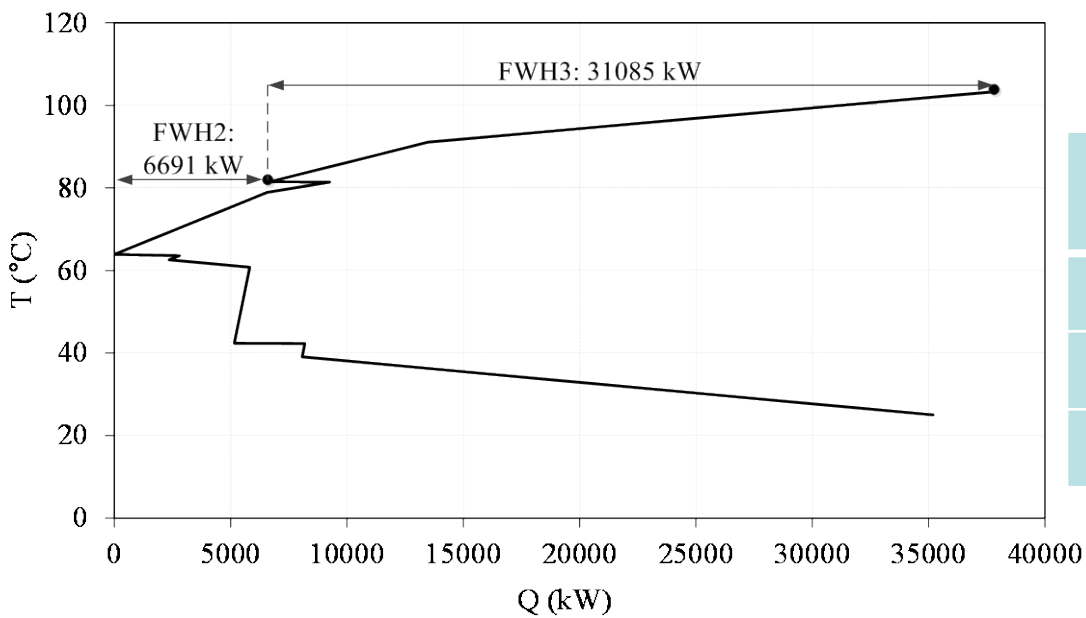

Heat demands

	Without integration	With integration
FWH1	35432	0
FWH2	36427	6691
FWH3	38957	31085

New decomposed heat loads (e.g. FWH2)

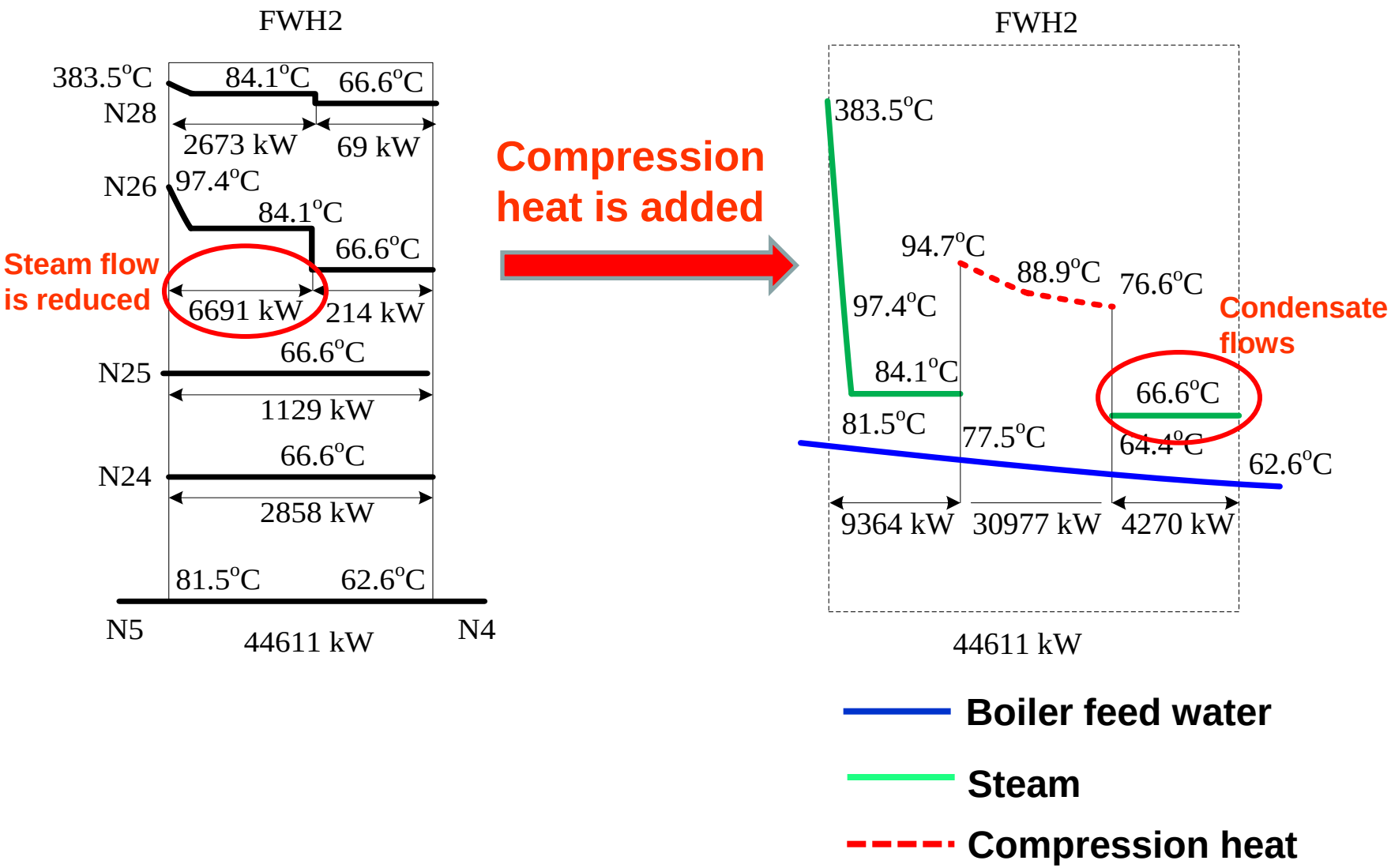

New heat balance after integration

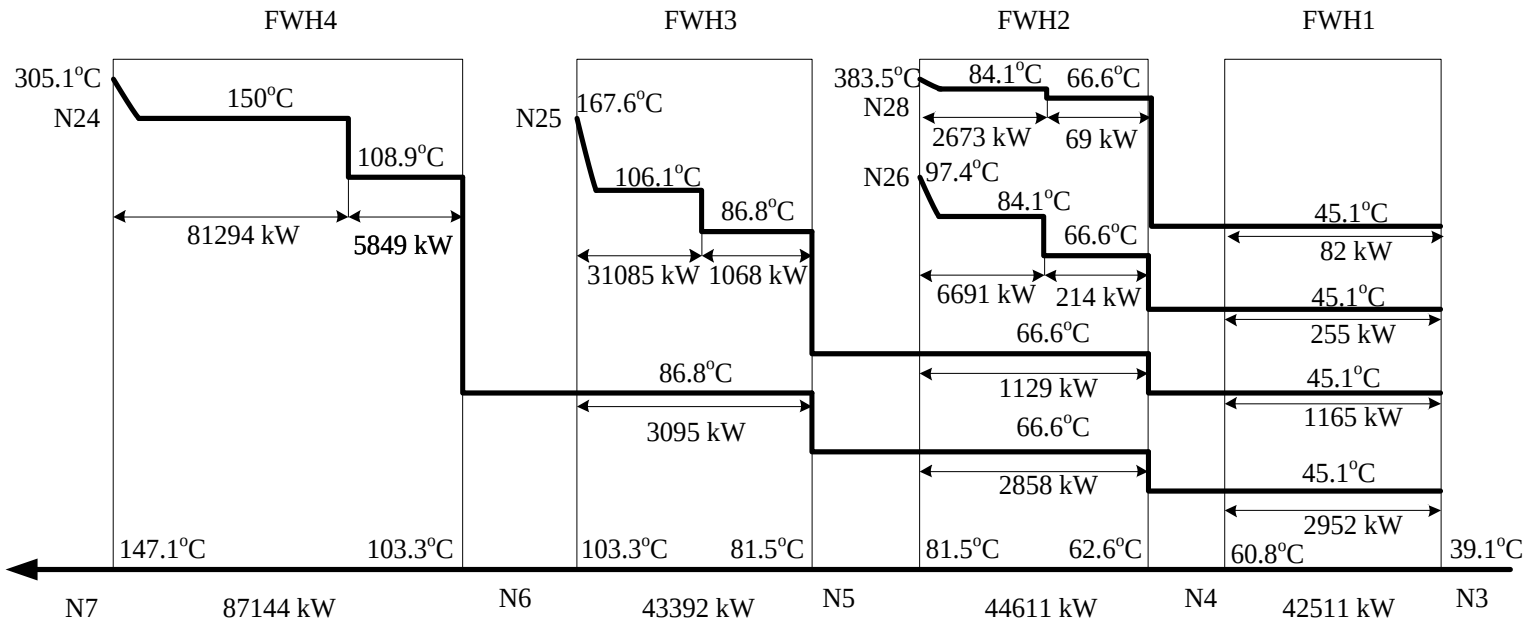

Heat balance is achieved when the compression heat is added

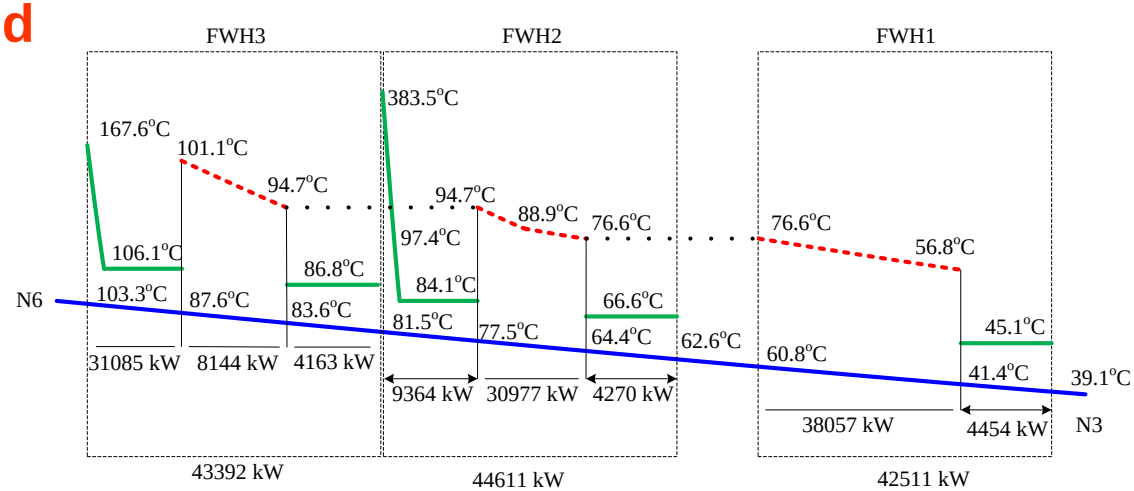

- Boiler feed water
- Steam
- Compression heat

The new preheating process

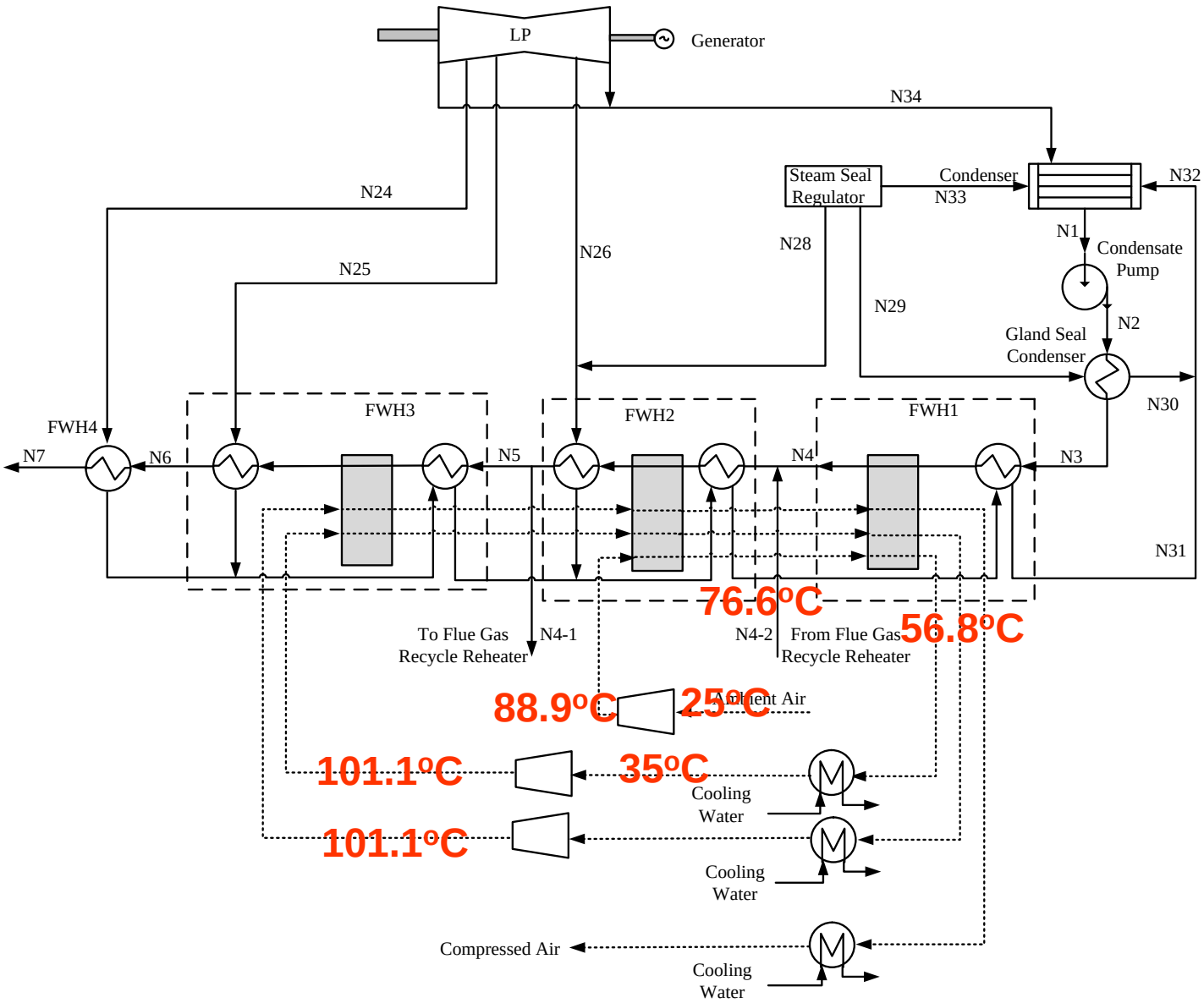

Integrating the ASU with the steam cycle (continued)

Case 2: two-stage compression

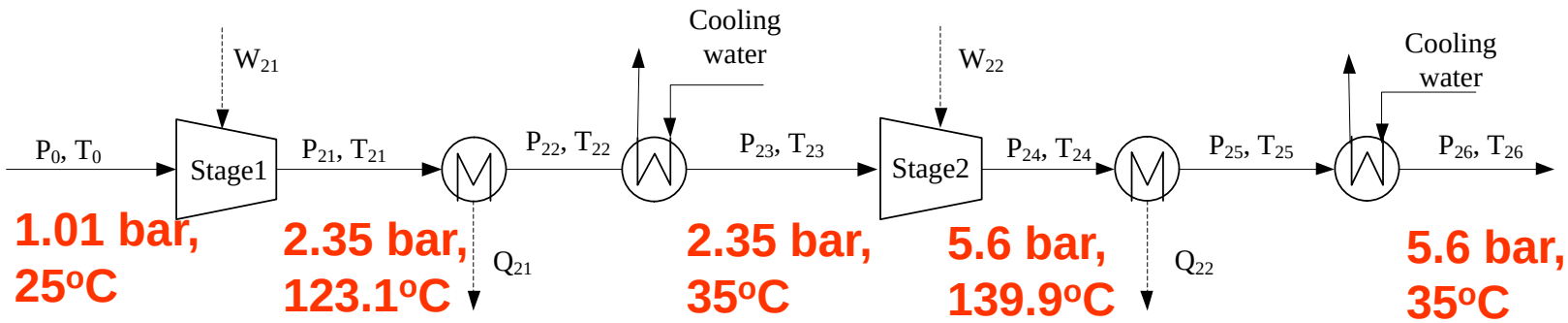

- **The compression heat can be used in FWH1-4**

Case 3: one-stage compression (adiabatic)

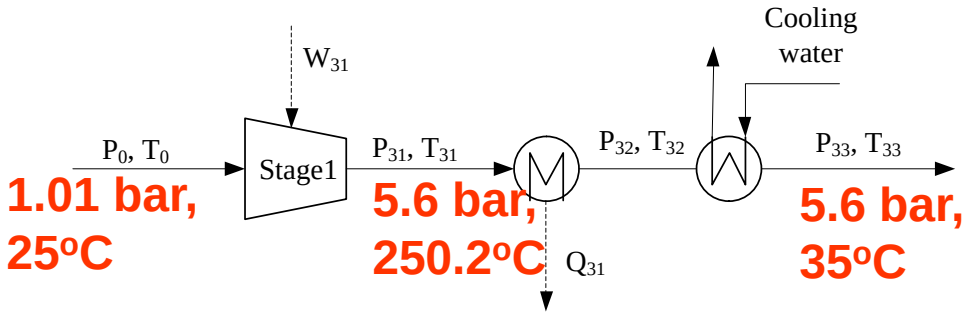

- **The compression heat can be used in FWH1-4 and FWH6-7**

Heat integration opportunites

Cases	Work in the ASU, kW	Work in the CPU, kW	Gross power, kW	Net power output, kW	Thermal efficiency (HHV), % points
Air fired case without CO_2 capture	0	0	585,228	553,563	39.75
Base case	124,005	69,315	791,953	560,017	29.81
"Isothermal" compression in the ASU and CPU	119,029	63,813	791,953	570,495	30.37
Case 1 (three-stage in the ASU: "isothermal")	119,029	63,813	799,133	577,675	30.75
Case 2 (two-stage in the ASU: base case)	124,005	63,813	804,512	578,078	30.77
Case 3 (one-stage in the ASU: adiabatic)	140,038	63,813	821,730	579,263	30.84
Case 4 (CPU: "isothermal")	119,029	63,813	797,032	575,574	30.64
Case 5 (CPU: adiabatic)	119,029	75,329	806,535	573,561	30.53
Case 6 (ASU: adiabatic; CPU: "isothermal")	140,038	63,813	827,654	585,187	31.15

- **Favourable compression:**
  - **Adiabatic for the ASU**
  - **"Isothermal" for the CPU**

- **The maximum improvement by heat integration: 0.78% points**

Further work

- **Mathematical optimization models for heat integration**
- **Benchmarking study (thermodynamic, technical and economic limitations) – A targeting approach**
- **Assessment of advanced CO_2 recovery methods**
  - **PSA separation of CO_2 + inert gases recycled to the ASU**
  - **Membrane separation of CO_2 + inert gases recycled to the burner**

Conclusions

- **For a coal based oxy-combustion power plant:**
  - **the thermal efficiency penalty related to CO_2 capture is around 10% points**
  - **the theoretical minimum is around 3.4% points**
- **Integrating the compression heat with the steam cycle:**
  - **"maximum" gain in thermal efficiency: 0.78% points**
- **A mathematical model is being developed for further heat integration studies**

Acknowledgements

This publication has been produced with support from the BIGCCS Centre, performed under the Norwegian research program Centres for Environment-friendly Energy Research (FME). The authors acknowledge the following partners for their contributions: Aker Solutions, ConocoPhillips, Gassco, Shell, Statoil, TOTAL, GDF SUEZ and the Research Council of Norway (193816/S60).

More details: chao.fu@ntnu.no