# Energy Management and Efficiency Improvement for Oxy-fuel Power Generation Systems with $CO_2$ Capture: An Exergy-based Approach

3rd Oxyfuel Combustion Conference

A. Shafeen, K. E. Zanganeh, CanmetENERGY,
Natural Resources Canada (NRCan)

Eric Croiset and Peter L. Douglas
University of Waterloo, Canada

CanmetENERGY
Leadership in ecoInnovation

# Agenda

- Background and Motivation
- Power Generation and $CO_2$ Capture
- Integrated Oxy-fuel Power Generation System
- Process Simulation and Integration
- Exergy Analysis
- Results
- Conclusions

# Power Generation and $CO_2$ Capture

- Fossil Fuel Power Generation with Carbon Capture & Storage (CCS)

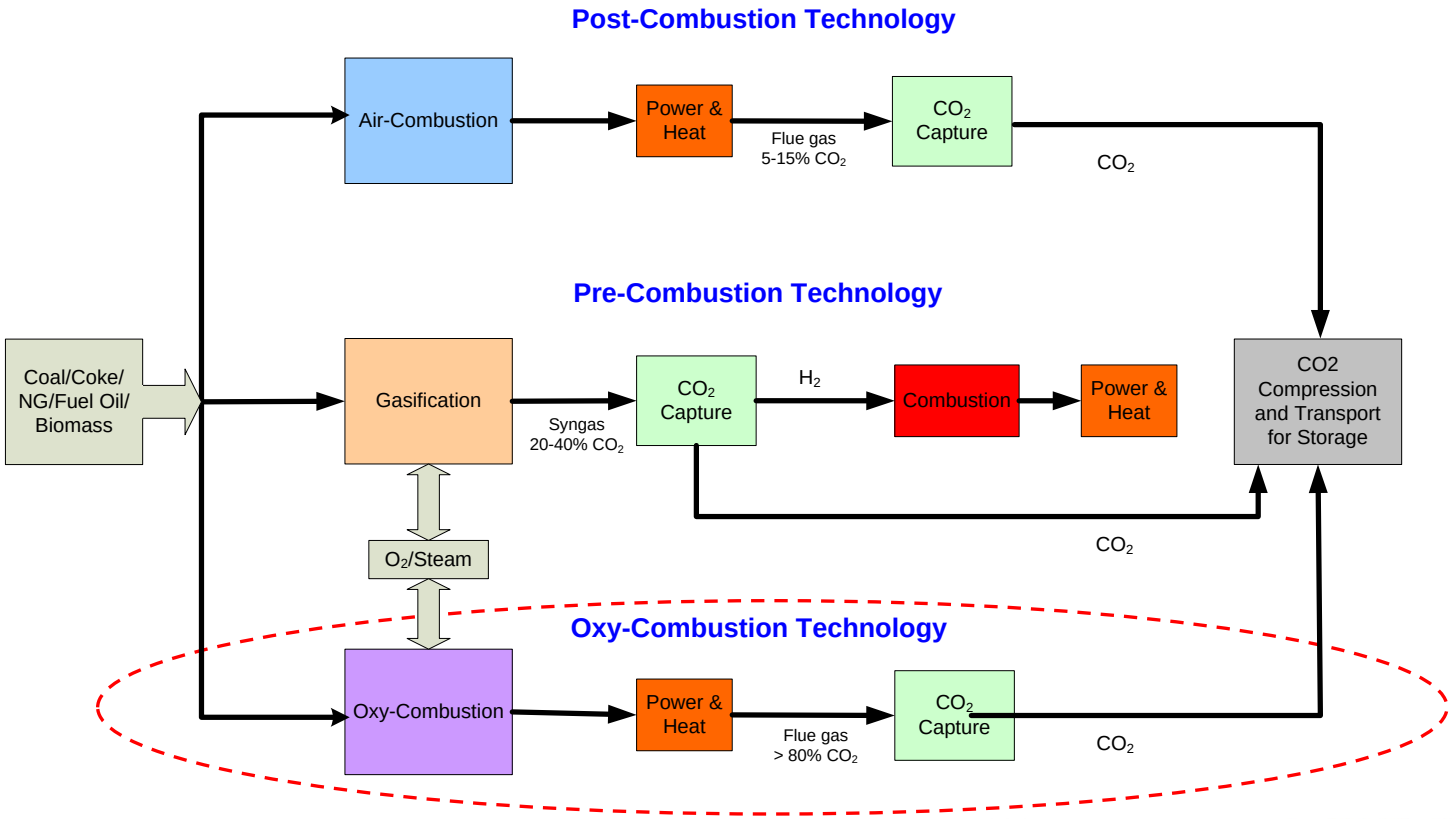

# Oxy-fuel Power Generation

- Integrated Oxy-fuel Power Generation System with $CO_2$ Capture

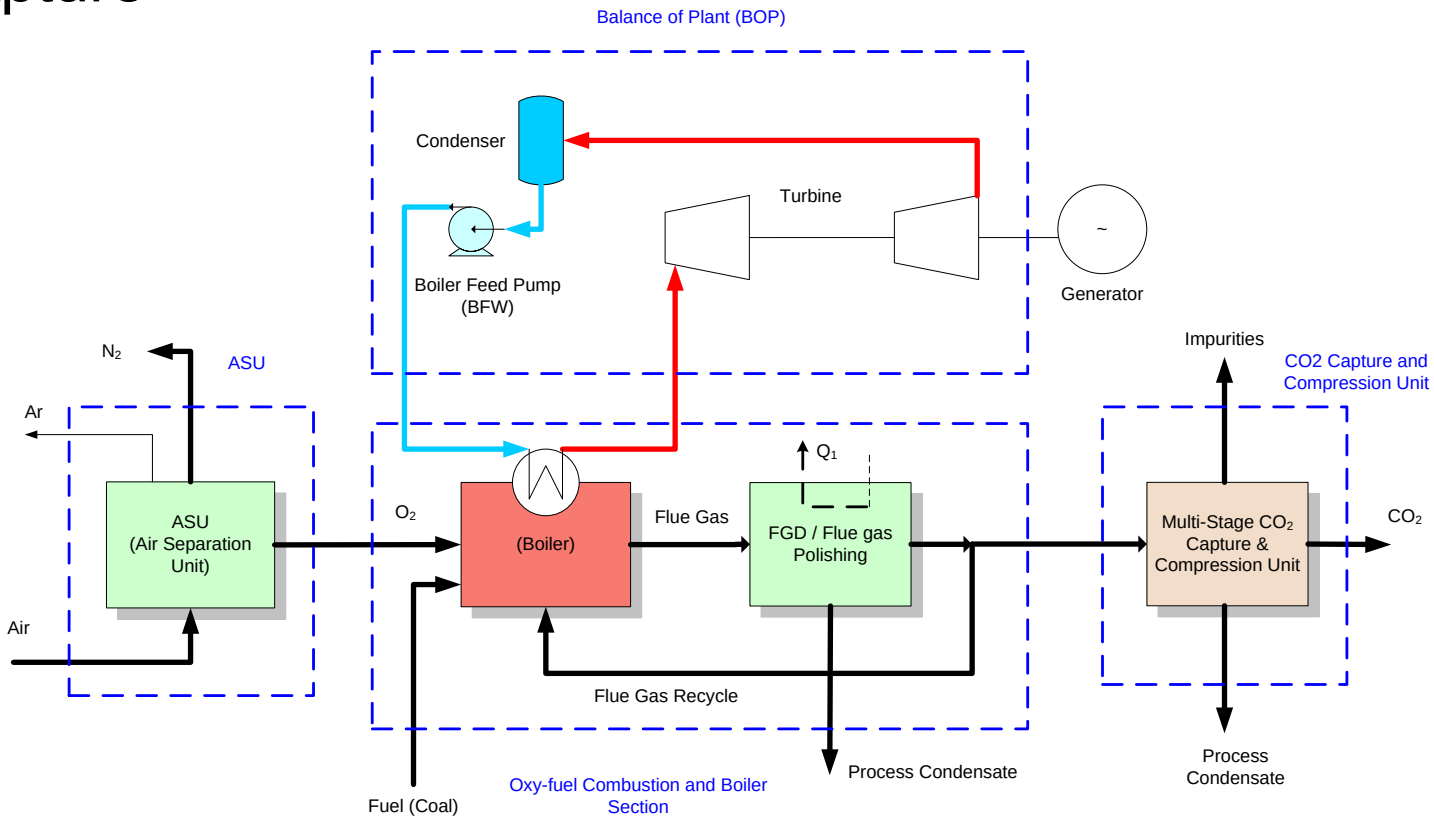

# Proposed Approach

Robust modeling with a systematic exergy analysis to identify the optimum options for process integration to achieve maximum energy efficiency. The approach involves the following steps:

1. Develop a model of an integrated oxy-fuel power plant comprised of a combustion boiler, flue gas section, BOP, ASU and $CO_2$ capture and compression unit ($CO_2$CCU);
2. Perform an exergy analysis to identify the quantity and location of exergy losses;
3. Minimize the exergy destruction rate; and,
4. Perform a sensitivity analysis to investigate the effect of fuel type and other relevant process parameters on the process.

# Process Simulation, Modeling and Integration

- Steady state process modeling:
  - Power plant capacity:786 $MW_{gross}$
  - Types of coal used: “lignite” and “bituminous”
  - Boiler, BOP, ASU, and $CO_2$CCU are coupled to form an integrated model
  - Aspen HYSYS process simulation platform
- Advantages of the proposed model:
  - Scale-up/scale-down of the integrated model is instantaneous
  - Sensitivity analysis is instantaneous
  - User friendly interface to change input parameters

# Integrated Model Development

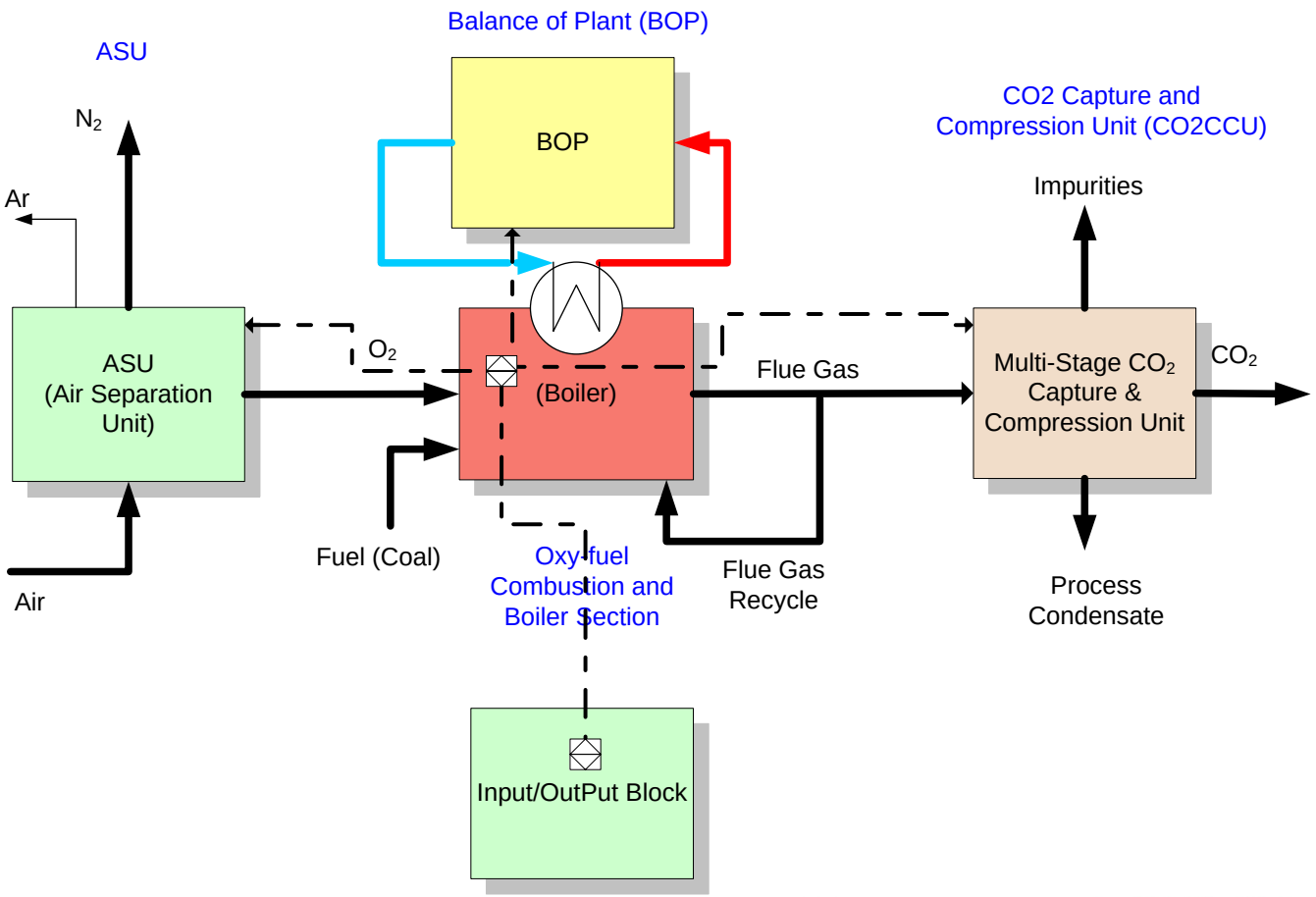

# ASU and BOP Models in Aspen HYSYS

## ASU Model

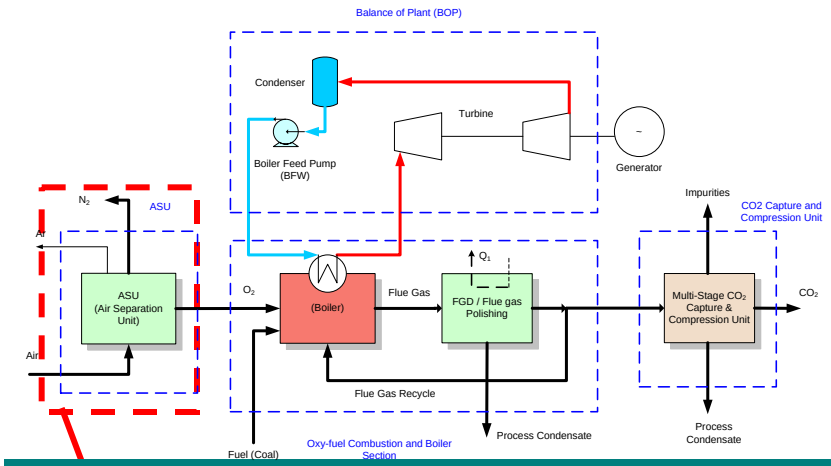


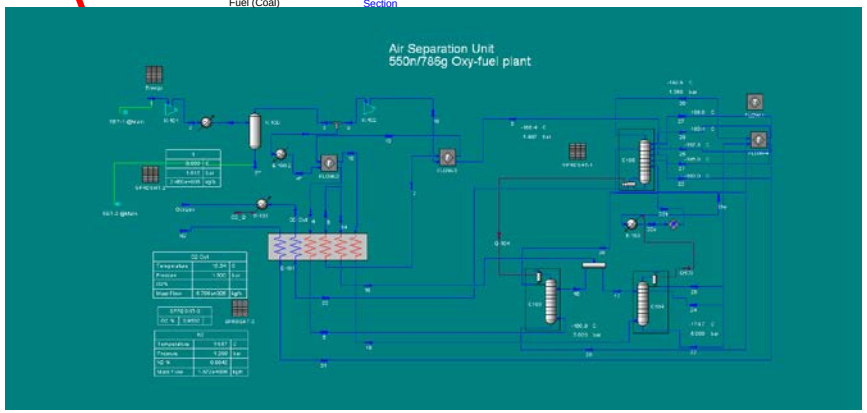


## BOP Model

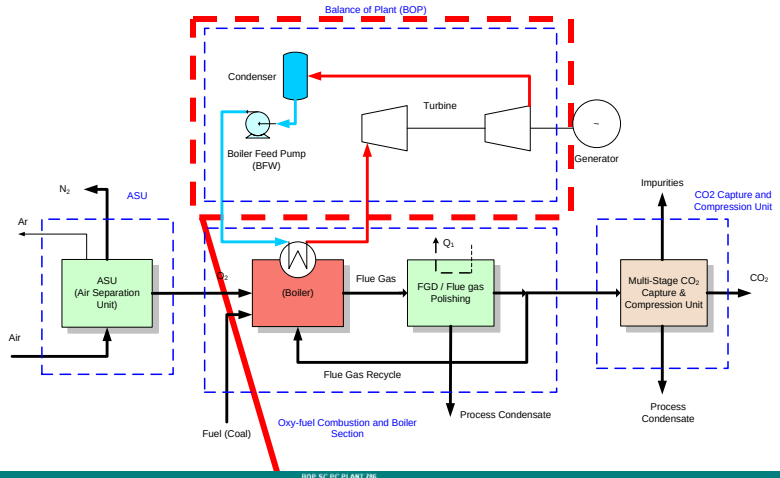


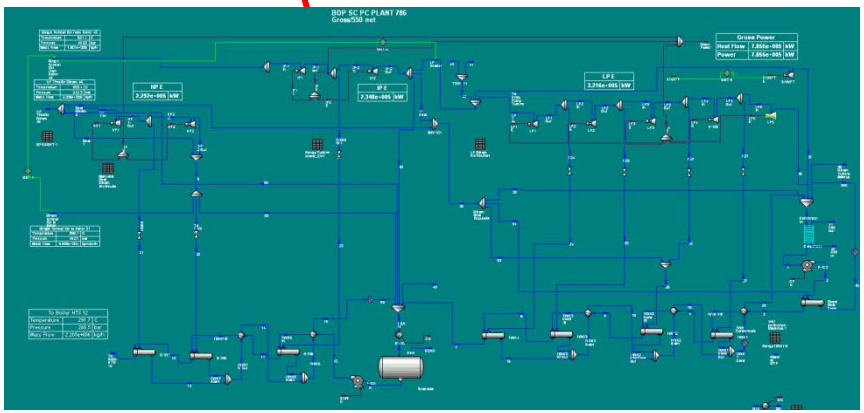

# Oxy-fuel Boiler Section and $CO_2$CCU Models

## Boiler Section Model

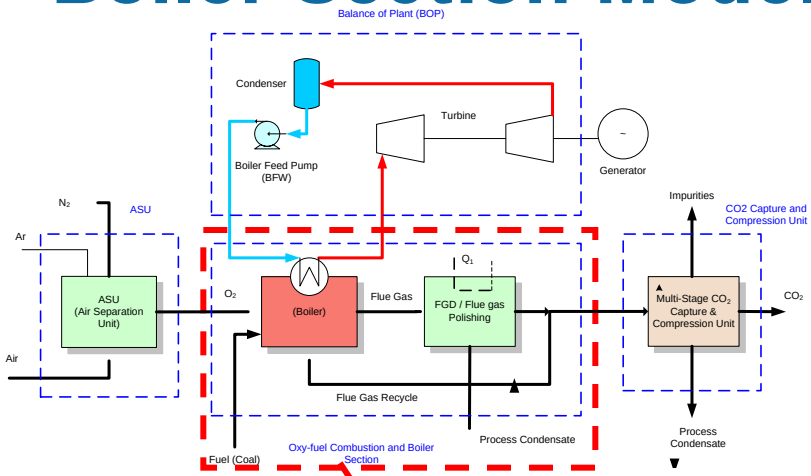


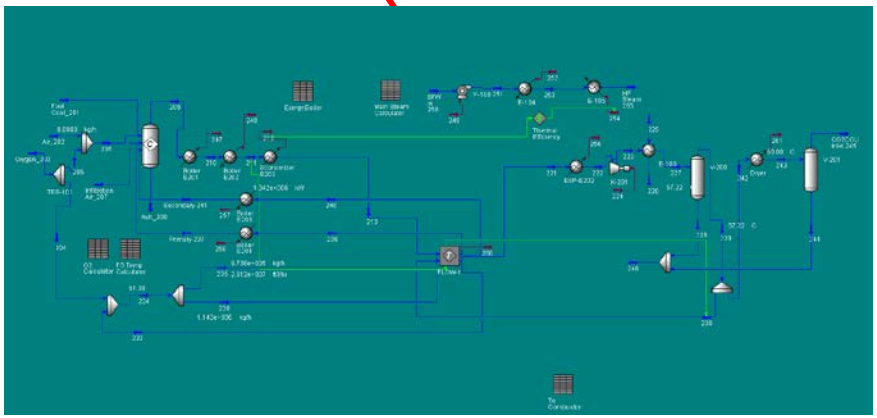

## $CO_2$CCU Model

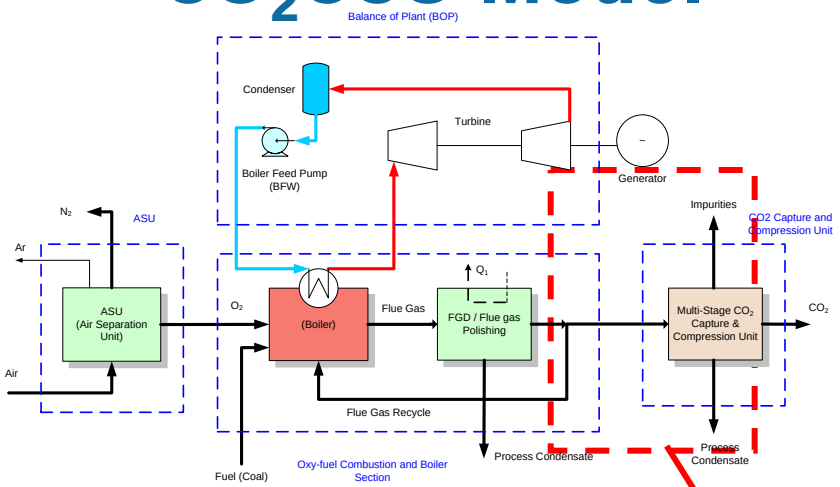


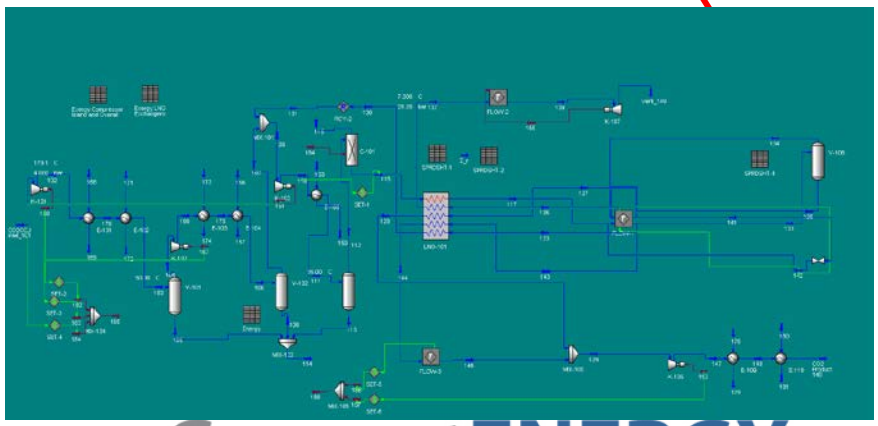

# Integrated Model of the Oxy-fuel Plant

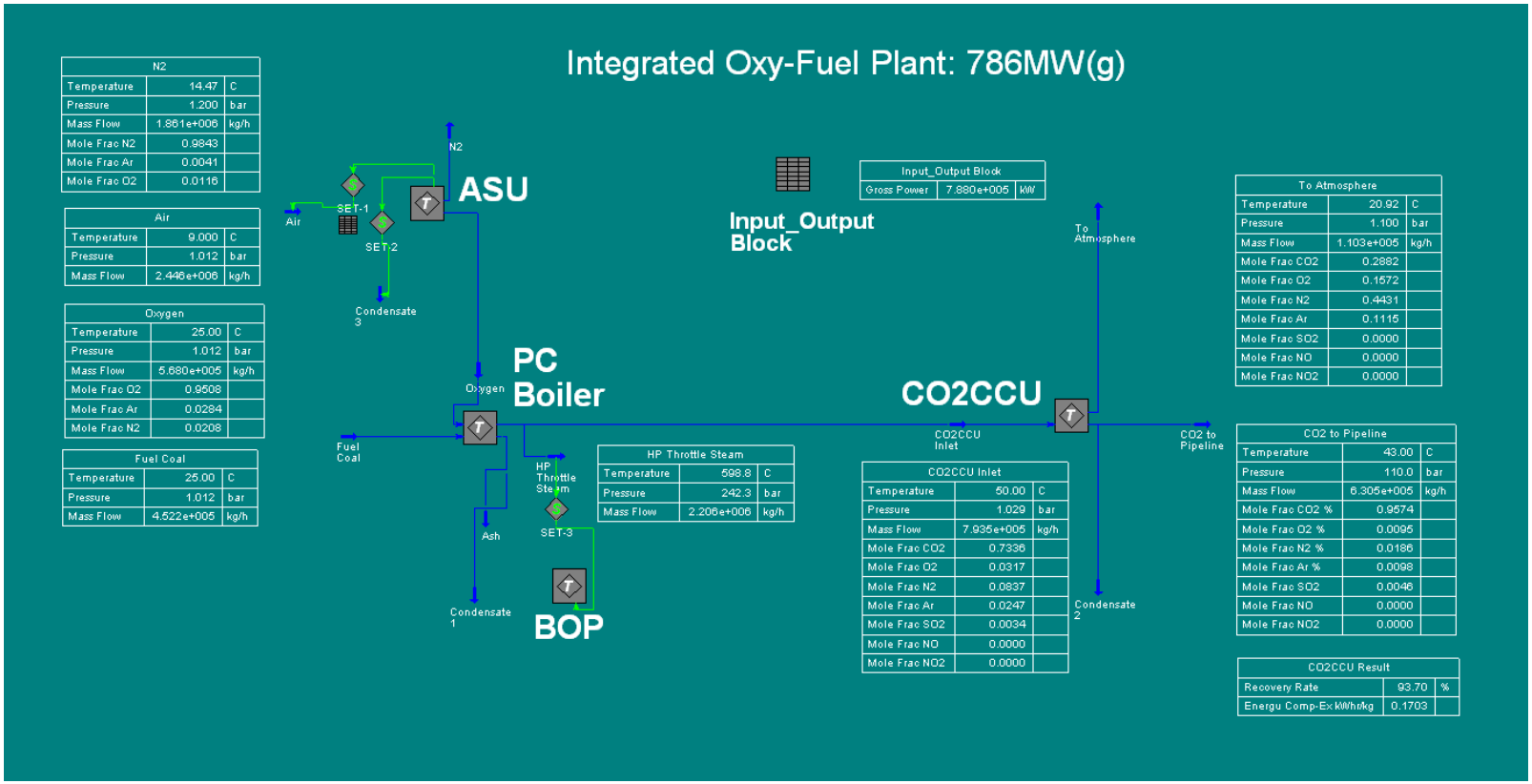

# Main Input Parameters

- Plant capacity
- Coal composition
- Cooling water temperature
- Environment condition for exergy analysis

**Lignite Coal composition**

| Coal Parameters | | |
|---|---|---|
| Component | Value | Unit |
| Carbon | 39.58 | Wt% |
| Hydrogen | 2.57 | Wt% |
| Oxygen | 9.70 | Wt% |
| Nitrogen | 0.67 | Wt% |
| Sulpher | 0.49 | Wt% |
| $H_2O$ | 33.54 | Wt% |
| Ash | 13.46 | Wt% |
| HHV (as received) | 6433 | Btu/lb |
| LHV (as received) | 5849 | Btu/lb |
| Coal Feed Rate | 452 | tonnes/hr |

**BOP Parameters**

| Stream Parameters | Flow (tonne/hr) | Temp (°C) | Pressure (bar) | Power (MW) |
|---|---|---|---|---|
| Main Steam | 2206 | 599 | 242.3 | |
| Reheat Steam to Boiler | 1801 | 362.7 | 49 | |
| Reheat Steam from Boiler | 1801 | 621 | 45 | |
| Feedwater to Boiler | 2205 | 292 | 289 | |
| Condenser | | | 0.07 | |
| Cooling Water in to Condenser | | 21 | | |
| Cooling Water out from Condenser | | 33 | | |
| Steam to ASU | 8.2 | 386 | 9.49 | |
| Steam to CO2 Dryer | 0.15 | 386 | 9.49 | |
| Gross Power Output | | | | 786 |

# Results: Exergy Analysis for Boiler and BOP Components

| | Power Gen | Power Consumption | | | Exergy Destruction | Exergy Efficiency | Exergy Destruction Percent |
|---|---|---|---|---|---|---|---|
| | kW | kW | $\dot{E}_{in}$ (kW) | $\dot{E}_{out}$ (kW) | $\dot{I}$ (kW) | $\psi$ | % |
| **Control Vol 1_Ex** | **787975** | | **1742647** | **857815** | **96858** | **89.05** | **59.22** |
| Condenser | | | 50243 | 14378 | 35866 | 28.62 | 21.93 |
| Deaerator | | | 82959 | 75965 | 6994 | 91.57 | 4.28 |
| FWH6_Ex | | | 160080 | 155268 | 4812 | 96.99 | 2.94 |
| FWH4_Ex | | | 46955 | 42535 | 4420 | 90.59 | 2.70 |
| BFW Pump | | 25712 | 75965 | 97361 | 4315 | 83.22 | 2.64 |
| FWH7_Ex | | | 218076 | 213938 | 4137 | 98.10 | 2.53 |
| FWH8_Ex | | | 243749 | 241628 | 2121 | 99.13 | 1.30 |
| FWH1_Ex | | | 6291 | 4837 | 1453 | 76.90 | 0.89 |
| FWH2_Ex | | | 12729 | 11459 | 1270 | 90.02 | 0.78 |
| FWH3_Ex | | | 21154 | 20069 | 1085 | 94.87 | 0.66 |
| Condestae Pump | | 1051 | 525 | 1344 | 232 | 77.97 | 0.14 |

## BOP Model

| | Power Generation | Power Consumption | | | Exergy Destruction | Exergy Efficiency | Exergy Destruction Percent |
|---|---|---|---|---|---|---|---|
| | kW | kW | $\dot{E}_{in}$ (kW) | $\dot{E}_{out}$ (kW) | $\dot{I}$ (kW) | $\psi$ | % |
| **Boiler CV 201** | | | **71771** | **1606595** | **2217819** | **40.90** | **97.87** |
| PAF CV202 | | 3230 | 1556 | 4091 | 695 | 78.47 | 0.03 |
| SAF CV 203 | | 1937 | 1827 | 3340 | 424 | 78.13 | 0.02 |
| PAPH CV 204 | | | 67540 | 59527 | 8014 | 88.14 | 0.35 |
| SAPH CV 205 | | | 66852 | 58842 | 8009 | 88.02 | 0.35 |
| RAPH CV 206 | | | 31673 | 27633 | 4040 | 87.25 | 0.18 |
| FDF CV 207 | | 6070 | 41632 | 46715 | 987 | 83.74 | 0.04 |
| **PGCooler1_CV208** | | | **47467** | **22658** | **24809** | **47.73** | **1.09** |
| PGCooler2_CV209 | | | 3245 | 1926 | 1319 | 59.35 | 0.06 |

## Boiler Model

R1

R2

Exergy destruction ranking in boiler

# Results: Exergy Analysis of the ASU and $CO_2$CCU Components

## ASU Model

| | Power Generation | Power Consumption | | | Exergy Destruction | Exergy Efficiency | Exergy Destruction Percent |
|---|---|---|---|---|---|---|---|
| | kW | kW | $\dot{E}_{in}$ (kW) | $\dot{E}_{out}$ (kW) | $\dot{I}$ (kW) | $\psi$ | % |
| Compr CV 301 | | 111392 | 47052 | 129382 | 29062 | 73.91 | 13.48 |
| Dryer CV 302 | | | 86508 | 85885 | 624 | 99.28 | 0.29 |
| LNG CV 303 | | | 267995 | 247145 | 20849 | 92.22 | 9.67 |
| **Column CV 305** | | | **525479** | **401174** | **124305** | **76.34** | **57.64** |
| LNG CV 306 | | | 415580 | 412734 | 2846 | 99.32 | 1.32 |
| Column CV 307 | | | 550762 | 512797 | 37965 | 93.11 | 17.60 |

## $CO_2$CCU Model

| | Power Generation | Power Consumption | | | Exergy Destruction | Exergy Efficiency | Exergy Destruction Percent |
|---|---|---|---|---|---|---|---|
| | kW | kW | $\dot{E}_{in}$ (kW) | $\dot{E}_{out}$ (kW) | $\dot{I}$ (kW) | $\psi$ | % |
| Pump_P101 | | 6 | 823 | 827 | 2 | 64.88 | 0.00 |
| Expander_K106 | 1219 | | 12039 | 10304 | 516 | 70.25 | 1.08 |
| **MP Compr CV101** | | **71609** | **10741** | **59383** | **22967** | **67.93** | **47.94** |
| HP Compr CV102 | | 27409 | 24775 | 41798 | 10386 | 62.11 | 21.68 |
| MP Expand CV103 | 9177 | | 18527 | 210 | 9140 | 50.10 | 19.08 |
| LNG 101 | | | 99188 | 97316 | 1872 | 98.11 | 3.91 |
| LNG 102 | | | 86537 | 83509 | 3028 | 96.50 | 6.32 |

# Process Improvements: sample result for boiler

- All the exergy destruction in all sections are ranked
- PC Boiler Section exergy analysis indicates that the process gas cooler (PGC 1) has some potential to improve exergy after the main boiler as the exergy destruction rate is ranked "2" in the PGC1.
- Integrating a Close Cooling Water (CCW) Loop in PG Cooler 1 in Boiler section and the 1st Air Cooler in ASU section will save net electrical power of 350 kW.
- This integration decreases the load on the cooling water loop significantly for the Boiler section
- Improvements in other sections will also be significant when the overall process improvement and integration will be completed

# Summary of Findings

- **BOP:** The maximum exergy destruction occurs in the turbine island (59%) and the Steam Condenser (22%)
- **Boiler:** All exergy destruction occurs in the Combustion boiler (99%)
- **ASU:** The low pressure distillation column accounts for most of the exergy destruction (58%)
- **$CO_2$CCU:** Most exergy destruction occurs in the medium pressure compressor island (48%)

# Conclusions

- An integrated model of an oxy-fuel power plant including BOP, Boiler, $CO_2$CCU and ASU was developed.
- Exergy analysis was used to analyse the performance of the plant
- Major exergy destruction pathways were identified and quantified
- Research work is ongoing to identify the best approach to mass and energy integration to achieve maximum exergy efficiency

# Acknowledgement


- This research work was funded by the “Program of Energy Research and Development (PERD)”, Natural Resources Canada.

# Reference-BOP

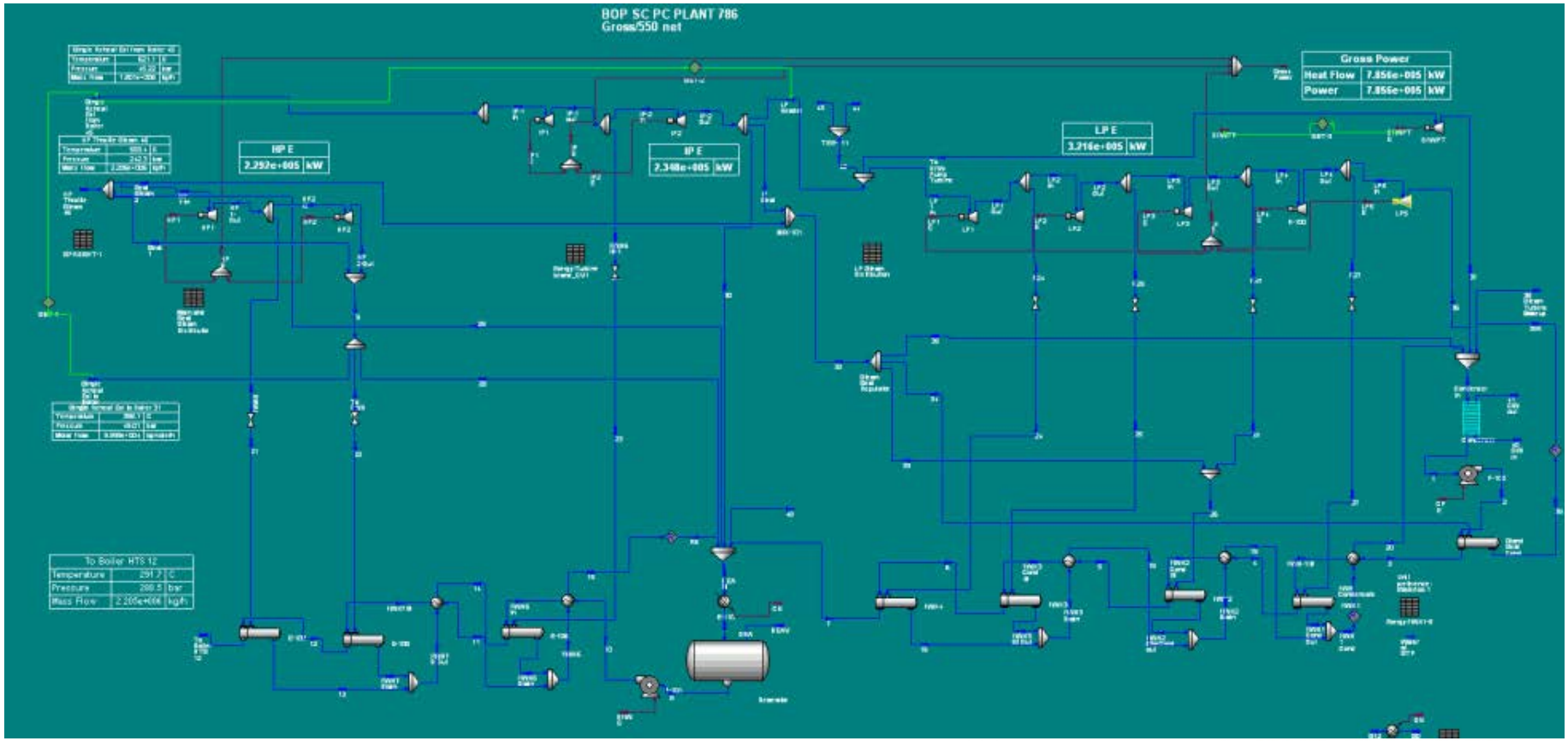


CanmetENERGY



Leadership in ecoInnovation

Natural Resources Canada | Ressources naturelles Canada

Canada

# Reference-ASU

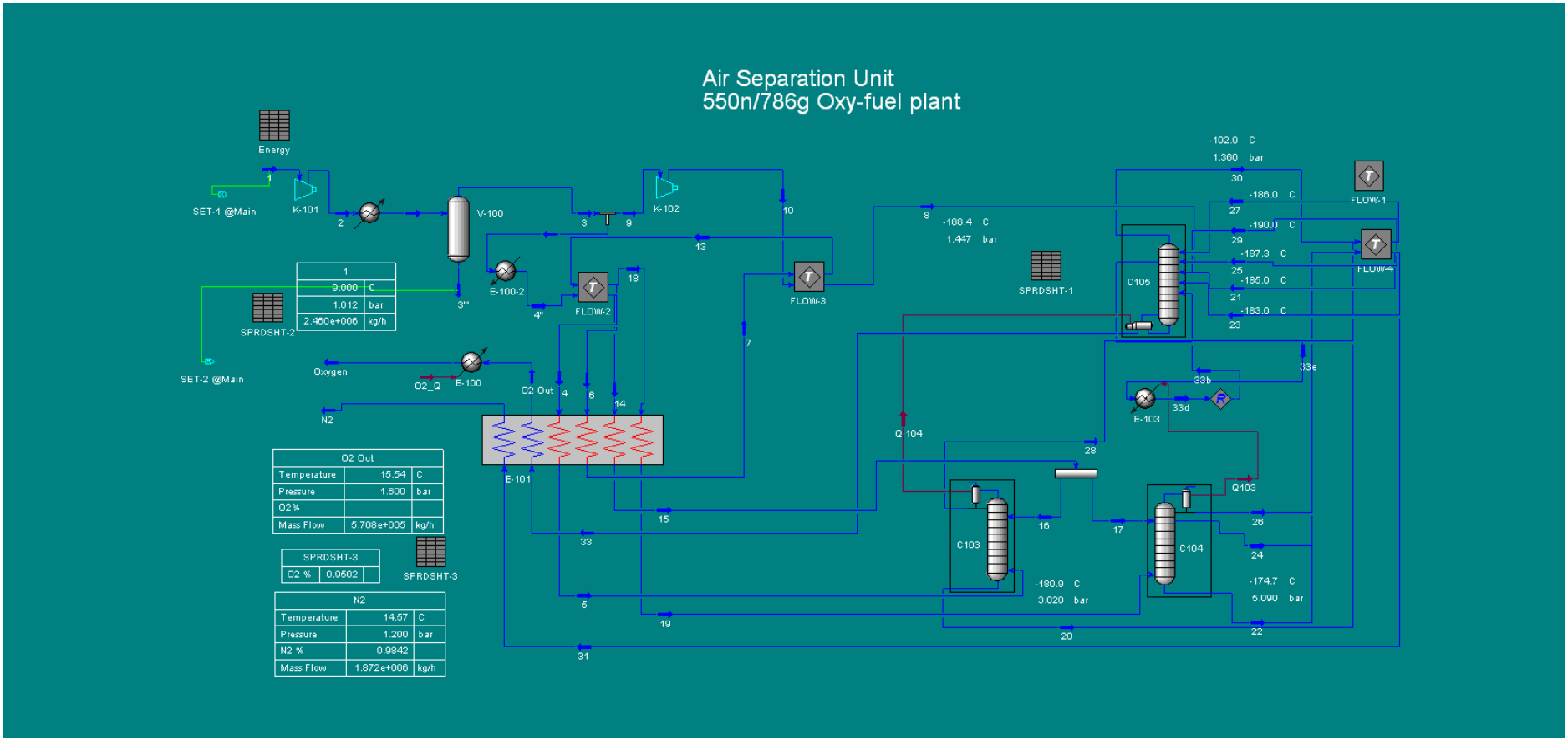

# Reference-Boiler

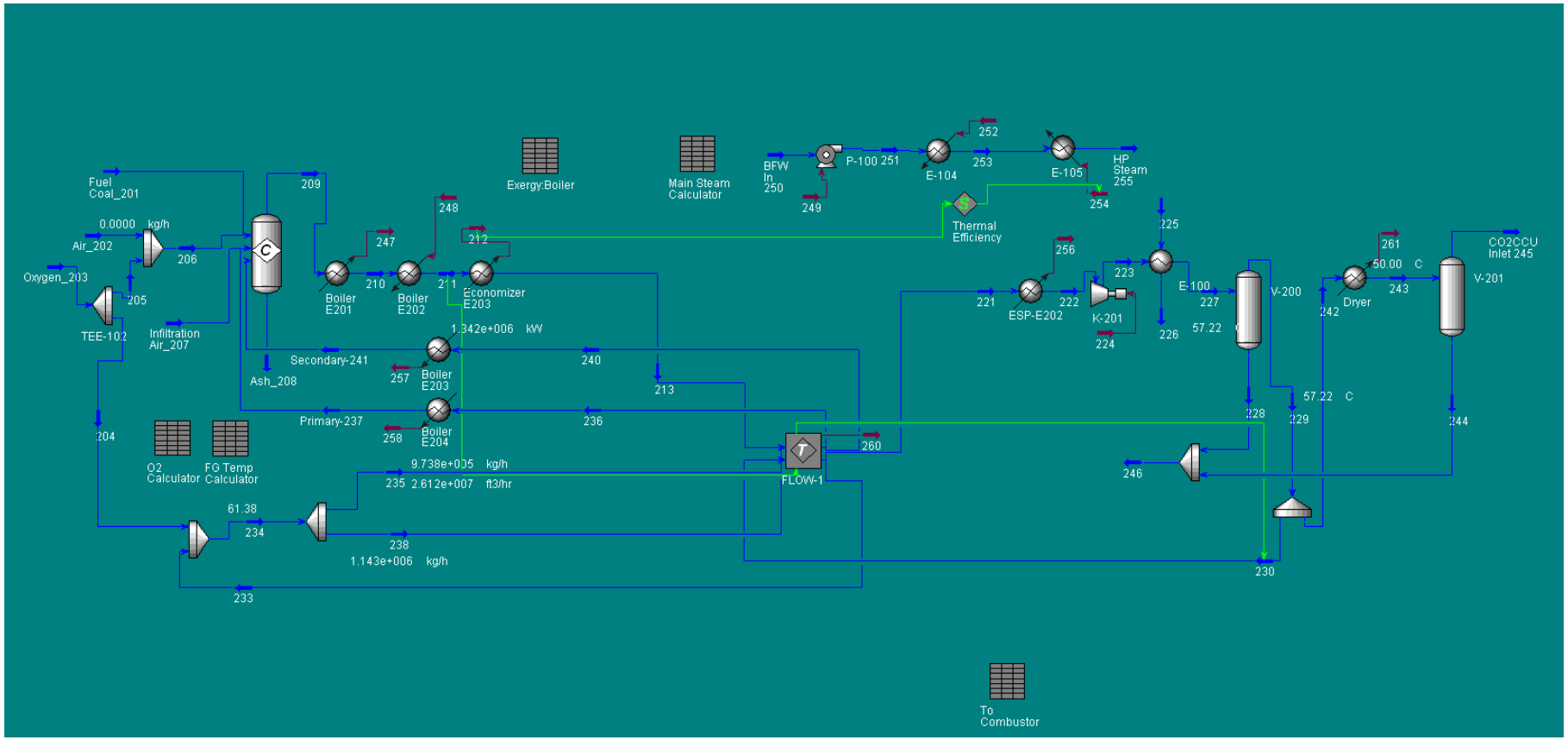


CanmetENERGY



Leadership in ecoInnovation

# Reference-CO2CCU

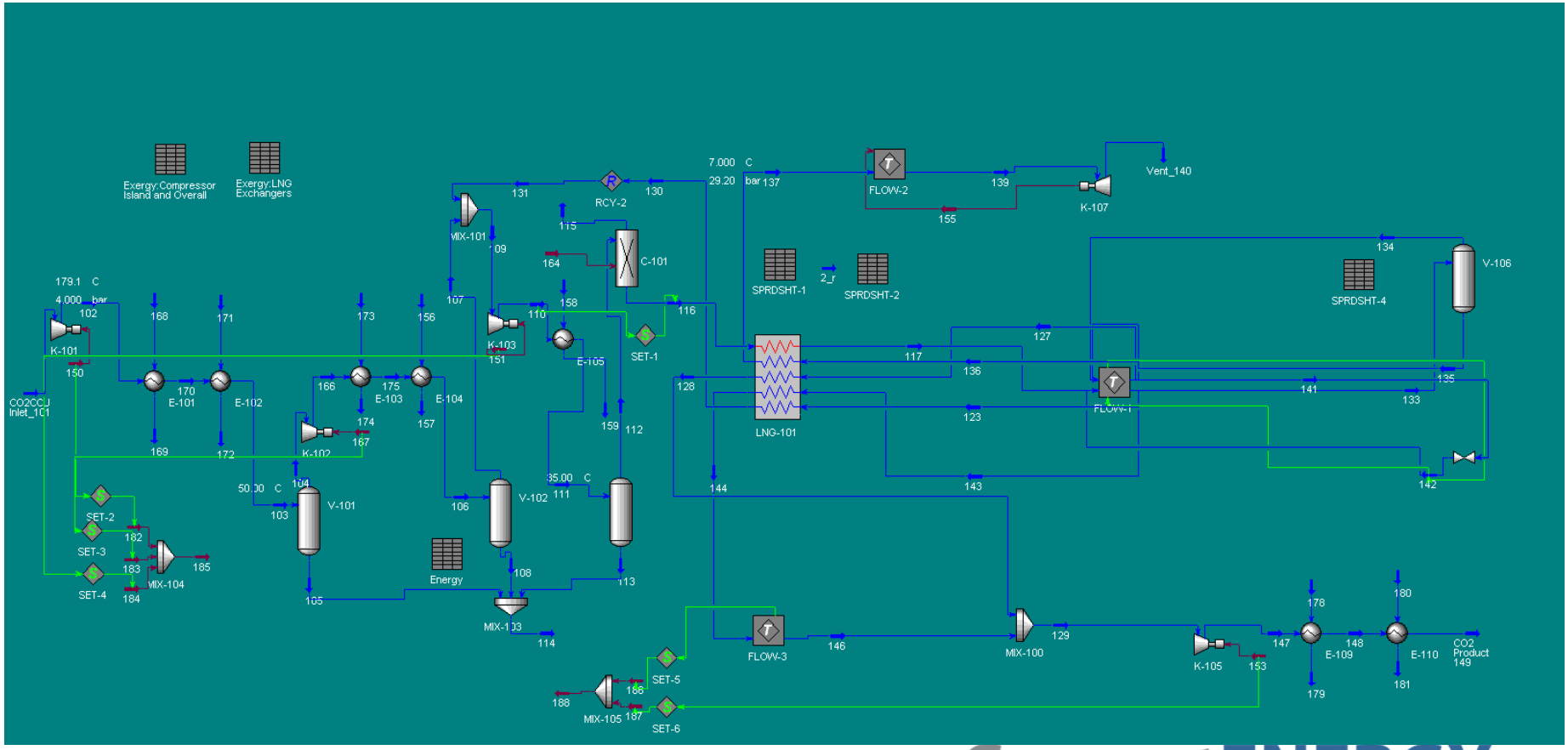


CanmetENERGY

Leadership in ecoInnovation