Power Generation Group Inc.

"We are passionate about innovation and technology leadership"

Clean Energy for a Secure Future

FutureGen 2.0: Power Block Design and Integration.

IEAGHG OCC3 Conference
Ponferrada, Spain

D.K. McDonald, Technical Fellow, Babcock & Wilcox

September 11, 2013

Co Authors: Lyle Falla, James MacInnis, B&W

Presentation Outline

1. Background

2. Project Status
   - Project Structure
   - Current Project Schedule Impact
   - Next Steps

3. Technical Status
   - Power Block Design
   - Performance and Costs

The State of CCS Worldwide

The State of CCS Worldwide

Power Generation Group Inc.

Current CCS Projects Worldwide

Largescale Power Plant CCS Projects Worldwide							
USA							
Project Name	**Leader**	**Feedstock**	**Size MW**	**Capture Process**	**CO2 Fate**	**Start-up**	**Location**
TCEP	Summit Power	Coal	400	Pre	EOR	planning	Texas
Trailblazer	Tenaska	Coal	765	Post	EOR	Cancelled	Texas
Kemper County	Southern	Coal	582	Pre	EOR	construction	Mississippi
HECA	SCS	Petcoke	400	Pre	EOR	planning	California
FutureGen 2.0	FutureGen Alliance	Coal	168	Oxy	Saline	2017	Illinois
WA Parish	NRG Energy	Coal	240	Post	EOR	planning	Texas
Sweeny Gasification	ConocoPhillips	Coal	680	Pre	Saline/ EOR	Cancelled	Texas
AEP Mountaineer	AEP	Coal	235	Post	Saline	Cancelled	West Virginia
Taylorville	Tenaska	Coal	602	Pre	Saline	Cancelled	Illinois
Antelope Valley	Basin Electric	Coal	120	Post	EOR	Cancelled	North Dakota
Canada							
Boundary Dam	SaskPower	Coal	110	Post	EOR	construction	Saskatchewan
Project Pioneer	TransAlta	Coal	450	Post	Saline/ EOR	Cancelled	Alberta
Bow City	BCPL	Coal	1000	Post	EOR	planning	Alberta
Belle Plaine (Polygen Project)	TransCanada	Petcoke	500	Pre	EOR	doubtful	Saskatchewan

Abbreviations used:

Oxy = Oxyfuel Combustion Capture
Pre = Pre Combustion Capture
Post = Post Combustion Capture
EOR = Enhanced Oil Recovery
EGR = Enhanced Gas Recovery

Saline = Saline Formation
Depleted Gas = Depleted Gas Reservoir
Depleted Oil = Depleted Oil Reservoir
TBD = To Be Decided

Source: Carbon Capture & Sequestration Technologies @ MIT
Current at May 13, 2013

Power Generation Group Inc.

Current CCS Projects Worldwide

Largescale Power Plant CCS Projects Worldwide							
European Union							
Project Name	**Leader**	**Feedstock**	**Size MW**	**Capture Process**	**CO2 Fate**	**Start-up**	**Location**
Longannet	Scottish Power	Coal	300	Post	Saline	Cancelled	UK
Belchatow	PGE	Coal	250-858	Post	Saline	Cancelled 4/13	Poland
Ferrybridge	SSE	Coal	500	Post	Depleted Oil	2015 decision	UK
ROAD	E.ON	Coal	250	Post	Saline	planning	Netherlands
Compostilla	ENDESA	Coal	300	Oxy	Saline	planning	Spain
Don Valley Power Project	2Co	Coal	920	Pre	EOR	planning	UK
Peterhead	Shell and SSE	Gas	385	Post	Depleted gas	planning	UK
Teesside Low Carbon	Progressive	Coal	400	Pre	Depleted Oil	planning	UK
Killingholme	C. GEN	Coal	430	Pre	Saline	planning	UK
White Rose	Capture Power	Coal	436	Oxy	Saline	planning	UK
Captain	Summit Power	Coal	400	Post	Depleted Oil	planning	UK
Magnum	Nuon	Various	1200	Pre	EOR/ EGR	planning	Netherlands
Getica	Turceni Energy	Coal	330	Post	Saline	planning	Germany
Porto Tolle	ENEL	Coal	250	Post	Saline	planning	Italy
Goldenbergwerk	RWE	Coal	450	Pre	Saline	Cancelled	Germany
Janschwalde	Vattenfall	Coal	250	Oxy	Saline	Cancelled	Germany

Abbreviations used:

Oxy = Oxyfuel Combustion Capture
Pre = Pre Combustion Capture
Post = Post Combustion Capture
EOR = Enhanced Oil Recovery
EGR = Enhanced Gas Recovery

Saline = Saline Formation
Depleted Gas = Depleted Gas Reservoir
Depleted Oil = Depleted Oil Reservoir
TBD = To Be Decided

Source: Carbon Capture & Sequestration Technologies @ MIT
Current at May 13, 2013

Power Generation Group Inc.

Current CCS Projects Worldwide

Large scale Power Plant CCS Projects Worldwide							
European Union							
Project Name	**Leader**	**Feedstock**	**Size MW**	**Capture Process**	**CO2 Fate**	**Start-up**	**Location**
Norway							
Longyearbyen	Unis CO2	Coal	N/A	N/A	Saline	planning	Norway
Mongstad	Statoil	Gas	350	Post	Saline	Operating	Norway
Kårstø	Naturkraft	Gas	420	Post	Saline	On Hold	Norway
Rest of the World							
Daqing	Alstom & Datang	Coal	350 &1000	Oxy	EOR	planning	China
Taiyuan	B&W and SIEG	Coal	350	Oxy	undecided	planning	China
HPAD	Masdar	Gas	400	Pre	EOR	planning	UAE
GreenGen	GreenGen	Coal	250/400	Pre	Saline	planning	China

Abbreviations used:

Oxy = Oxyfuel Combustion Capture
Pre = Pre Combustion Capture
Post = Post Combustion Capture
EOR = Enhanced Oil Recovery
EGR = Enhanced Gas Recovery

Saline = Saline Formation
Depleted Gas = Depleted Gas Reservoir
Depleted Oil = Depleted Oil Reservoir
TBD = To Be Decided

Source: Carbon Capture & Sequestration Technologies @ MIT
Current at May 13, 2013
Taiyuan added

FutureGen 2.0 History

2010

- Awarded $1 billion AARA funding in September
- Began Phase 1 design with Illinois #6 coal

2011

- Redesigned with Illinois-PRB blend to reduce cost
- Storage site in Morgan County selected
- CO_2 liability management addressed

FutureGen 2.0 History

2012

- Pre-FEED successfully completed
- Primary PPA terms approved
- Air/water permit modifications filed
- Pipeline permit application filed
- Pore space acquisition nearly completed
- DOE cooperative agreement transferred to FGIA

2013

- Phase II approved by DOE
- Contract executed for sale of a portion of the Meredosia plant to FGIA
- EIS finalized (ROD expected this year)
- Strong community support

FutureGen 2.0 Project Organizational Structure

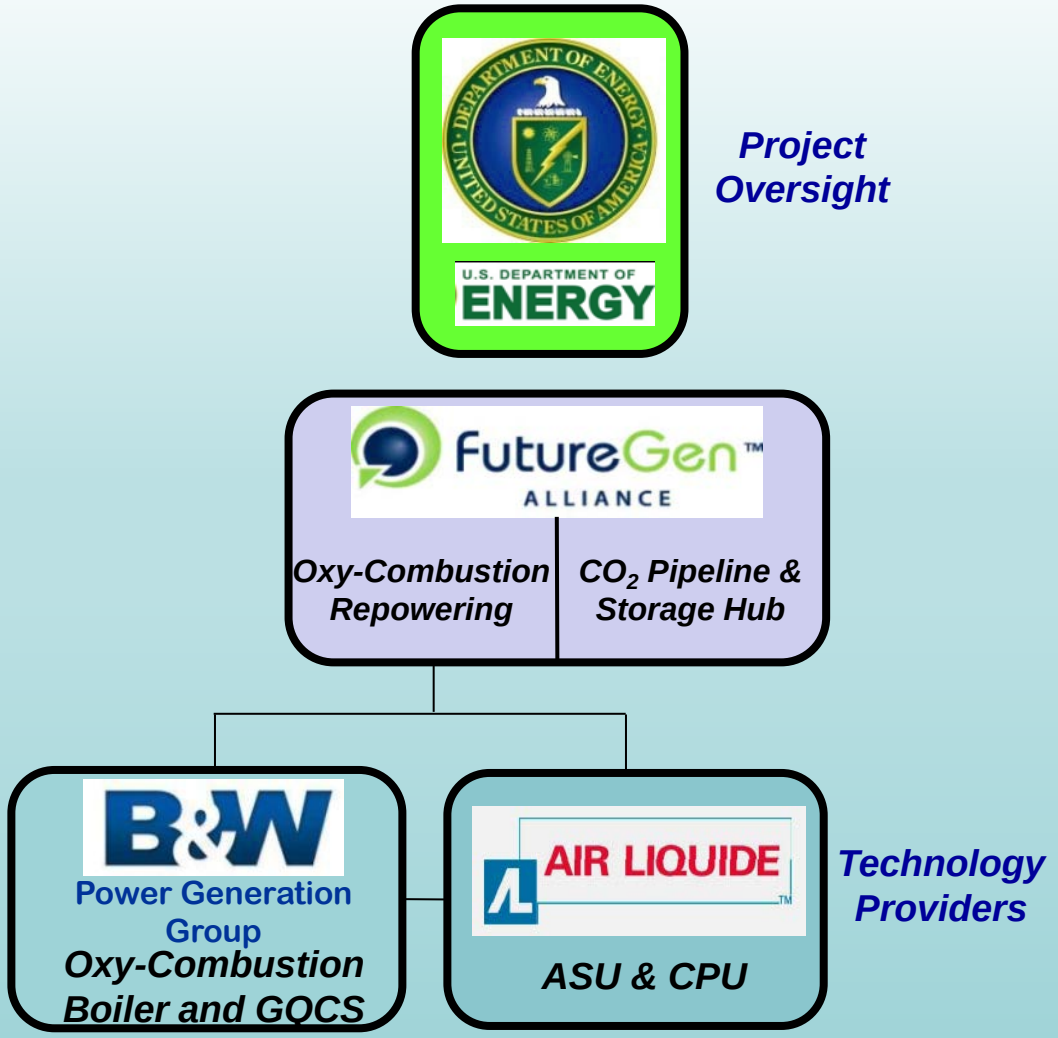

FutureGen 2.0 Project Schedule & Status

Phase I	Phase II	Phase III	Phase IV
Pre-FEED *(Front End Engineering Design)* **October 2010 thru June 2012**	**FEED** **February 2013 no later than June 16, 2014**	**EPC and Startup** **No later than June 16, 2014 to June 2017**	**Test Period** **July 2017 to March 2020** **(monitoring continues until March 2022)**

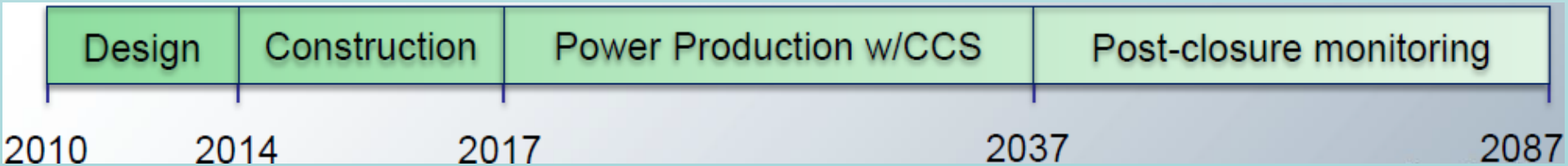

Capture Plant Scope Split

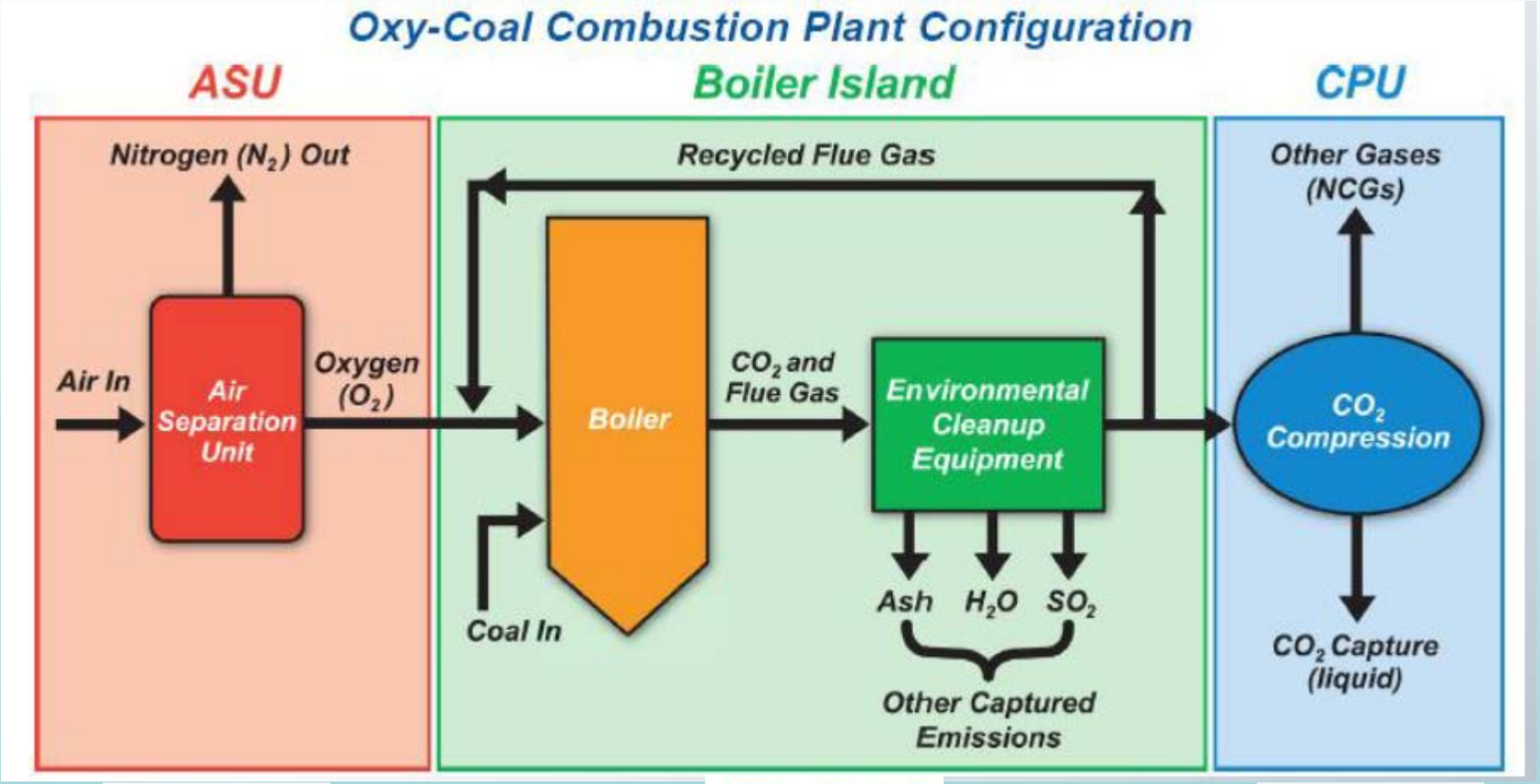

Transport and Storage Scope

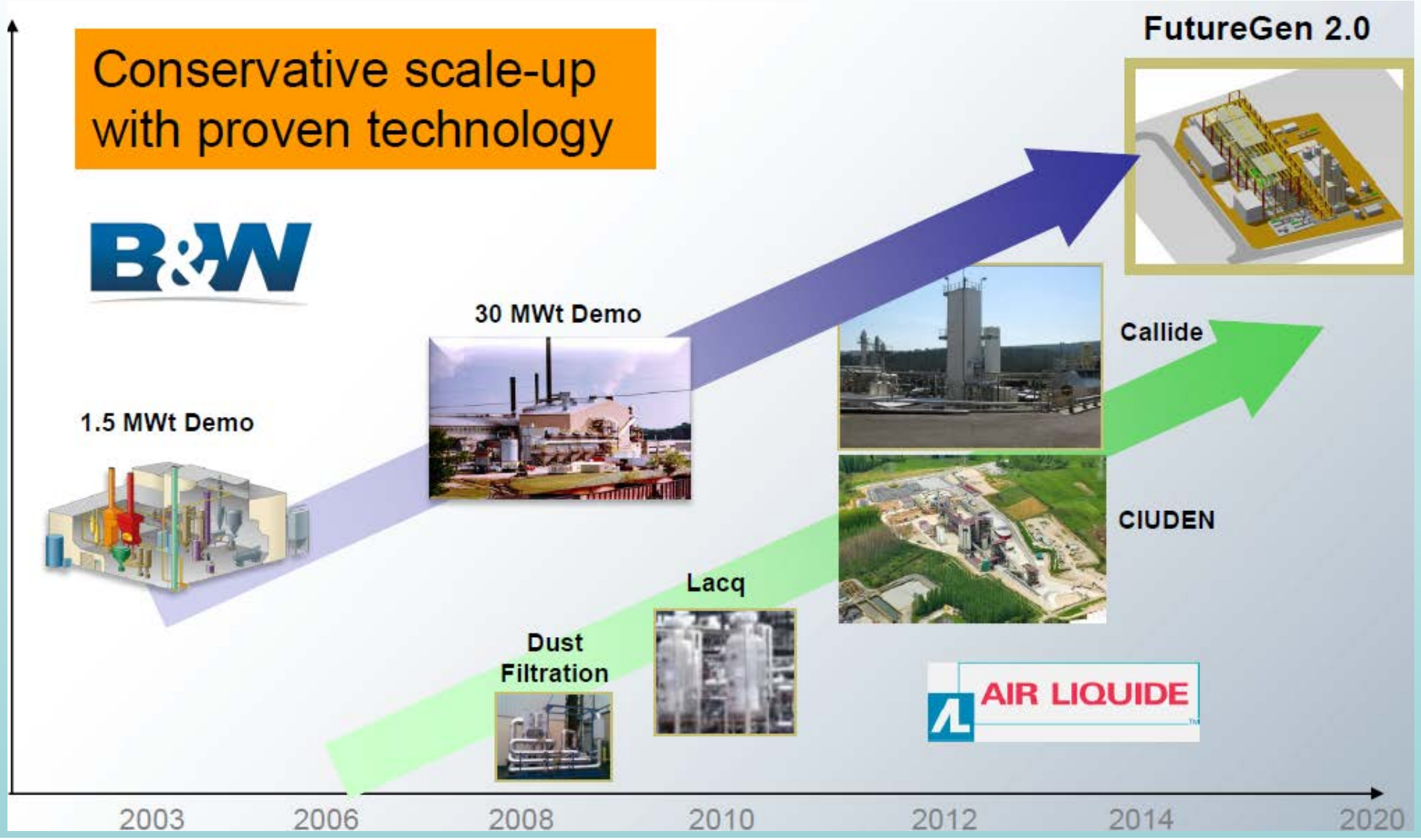

Power Generation Group Inc.

FutureGen 2.0 Process Configuration

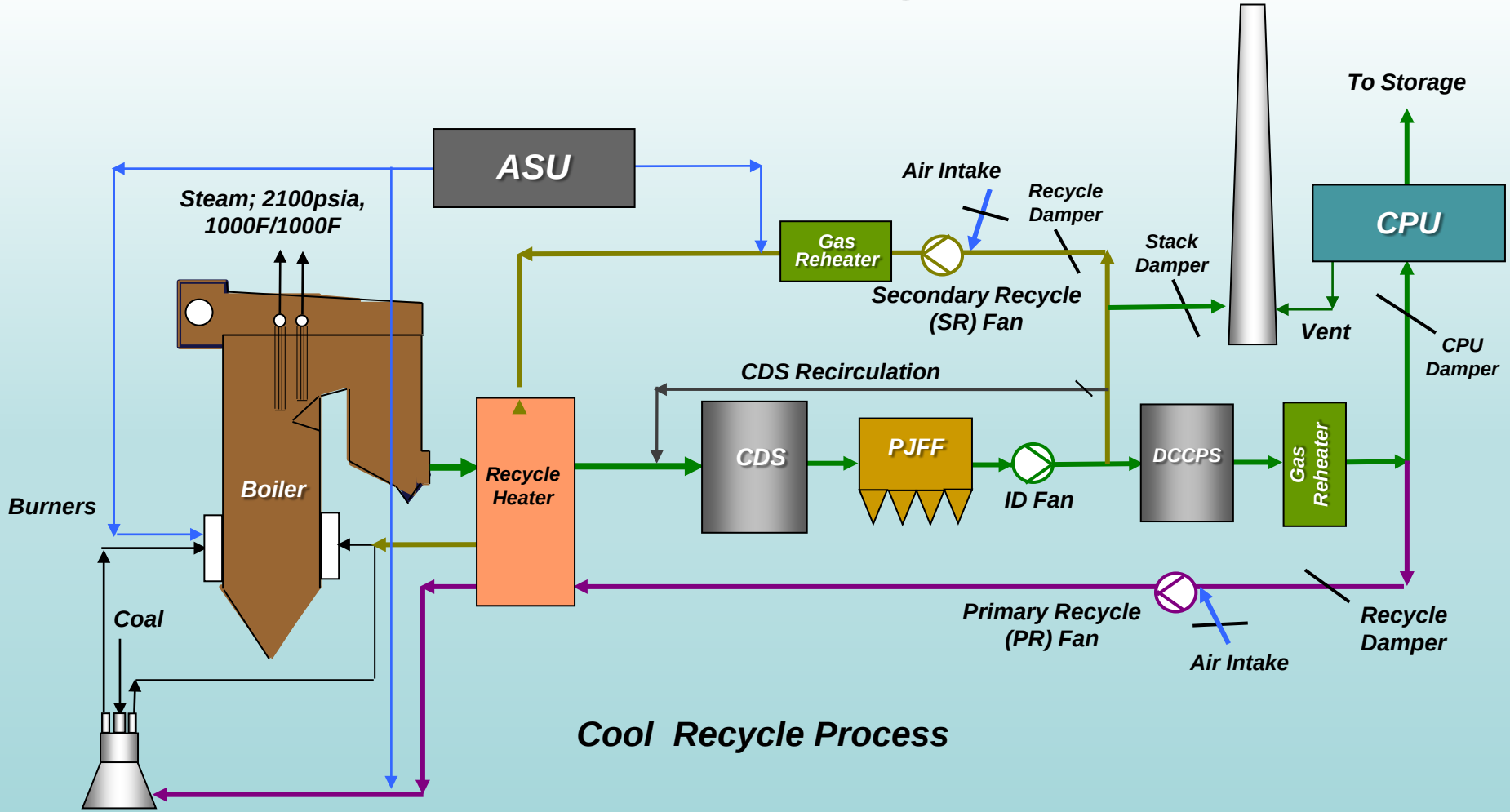

Cool Recycle Process

Power Generation Group Inc.

FutureGen 2.0 Process Configuration

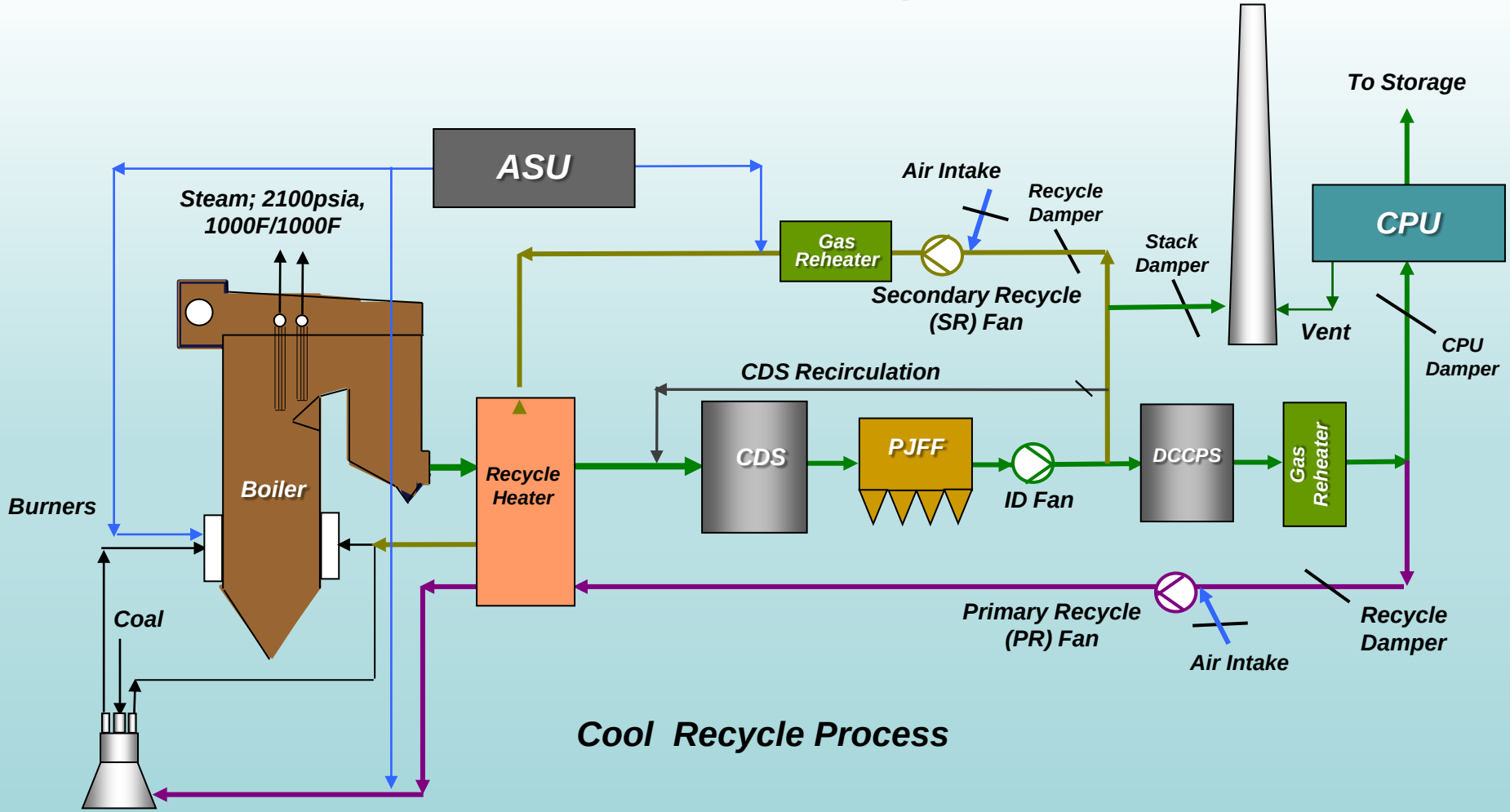

Cool Recycle Process

FutureGen 2.0 Phase II

Planned Activities

Project Level:

- Pipeline easement acquisition
- Complete EPC, commodity and O&M contracts
- Receive Final permits
- Obtain NEPA approval and DOE “Record of Decision” (ROD)
- Financial Close

Planned Activities

Technical:

- Evaluate steam turbine upgrade
- Complete dynamic analysis of gas side
- Confirm CDS stoichiometry
- Complete component engineering in preparation for fabrication

  • • • • • • • • • • • • • •
- 3-D plant model
- Completion of construction drawings
- Final equipment specifications
- Select key equipment vendors

Power Generation Group Inc.

FutureGen 2.0 Phase II

Gas Side Dynamic Analysis

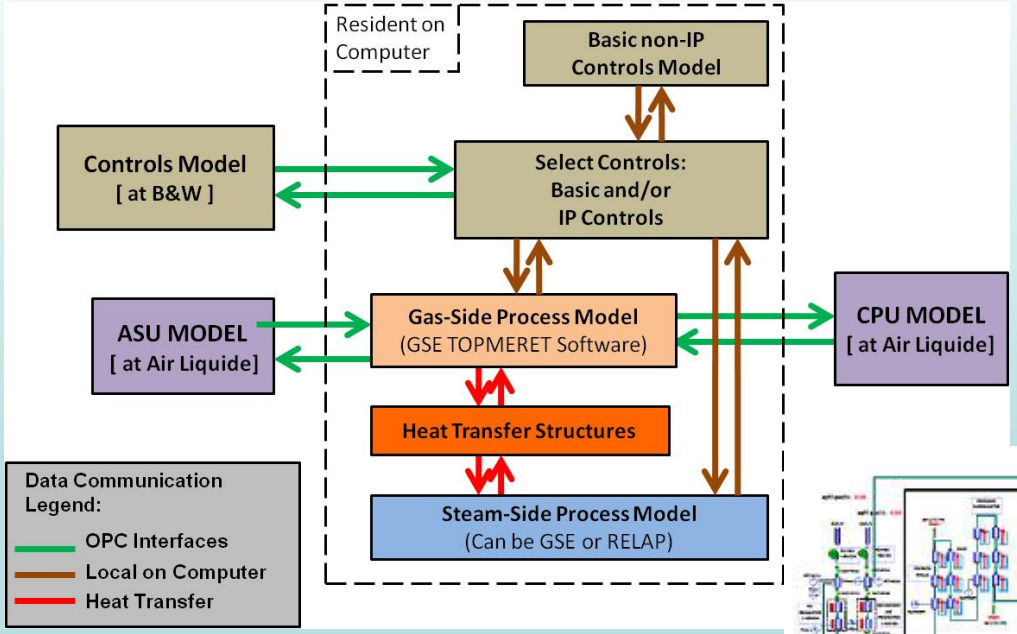

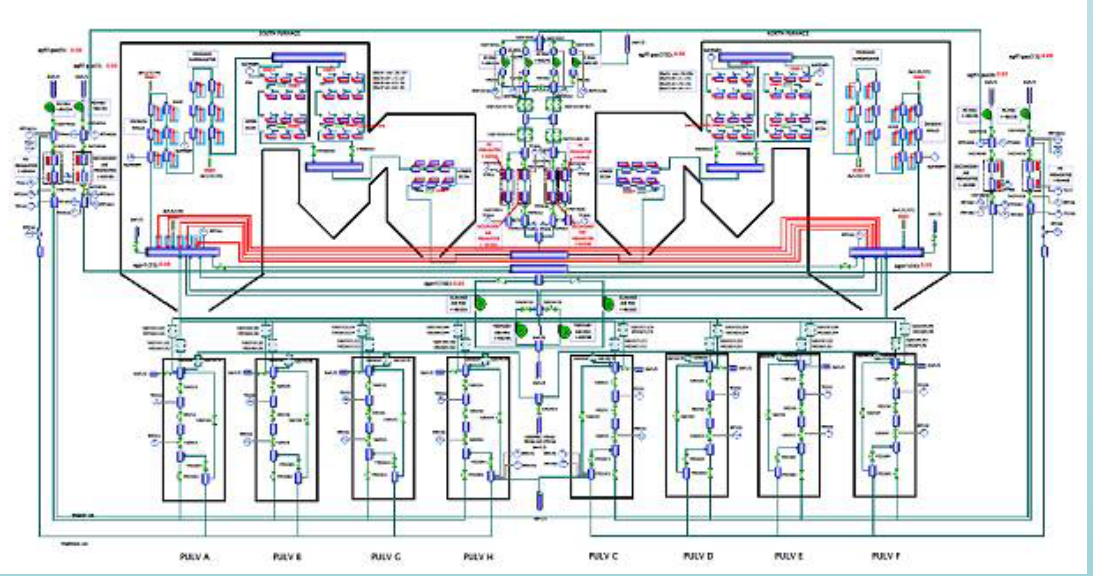

FutureGen 2.0 Phase II

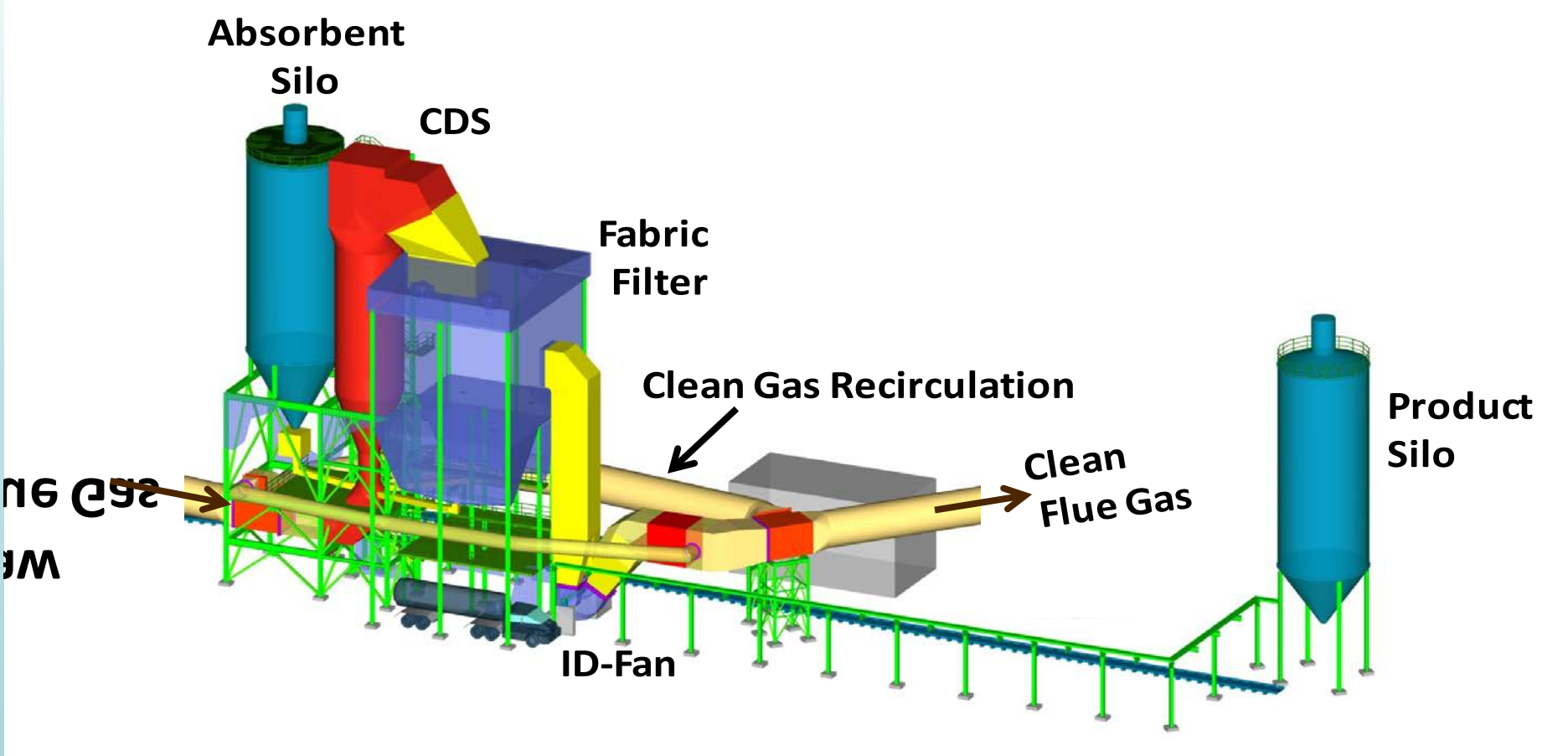

Power Generation Group Inc.

FutureGen 2.0 Phase II

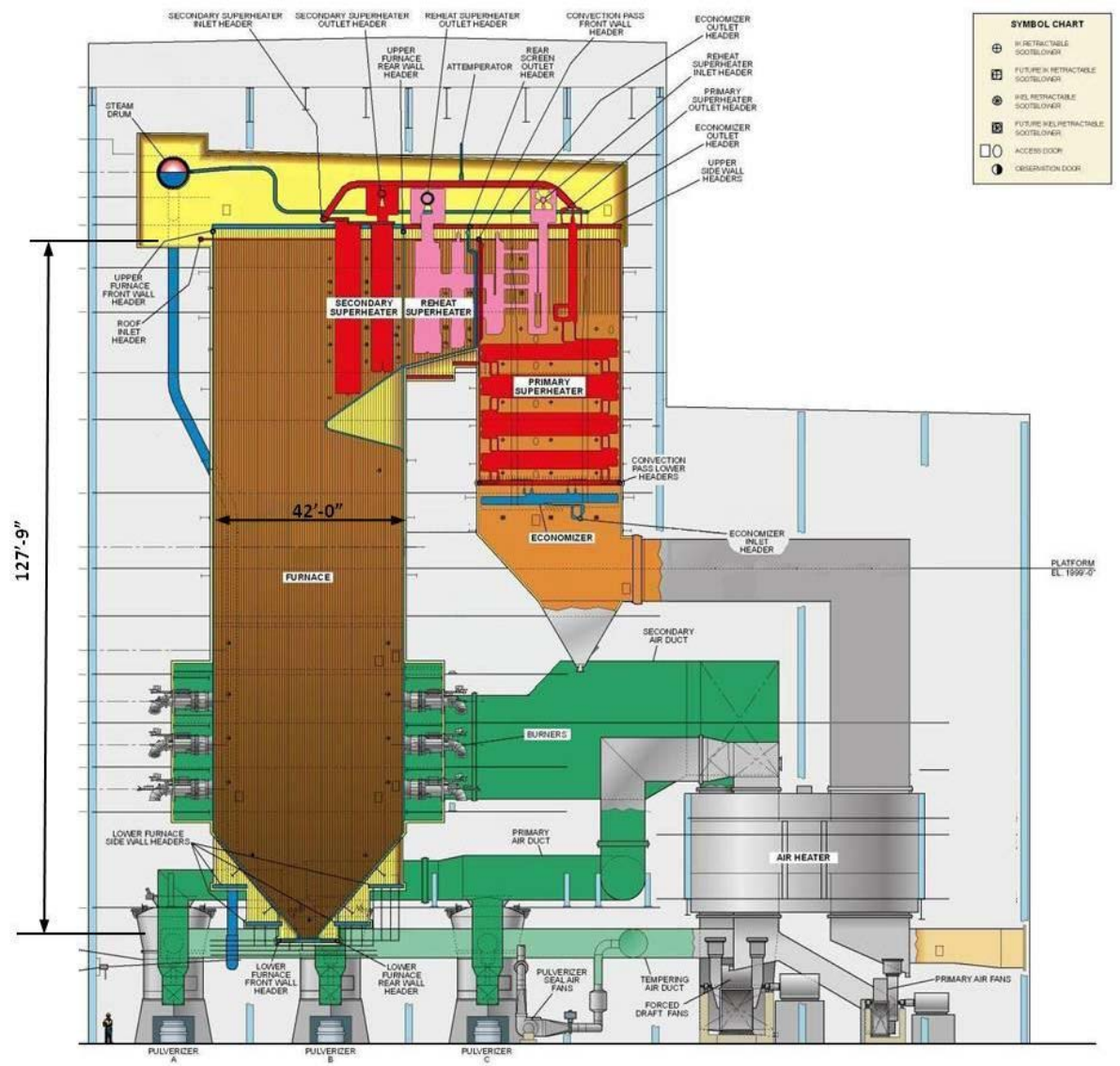

Power Generation Group Inc.

FutureGen 2.0 – Carbon Capture Plant Arrangement

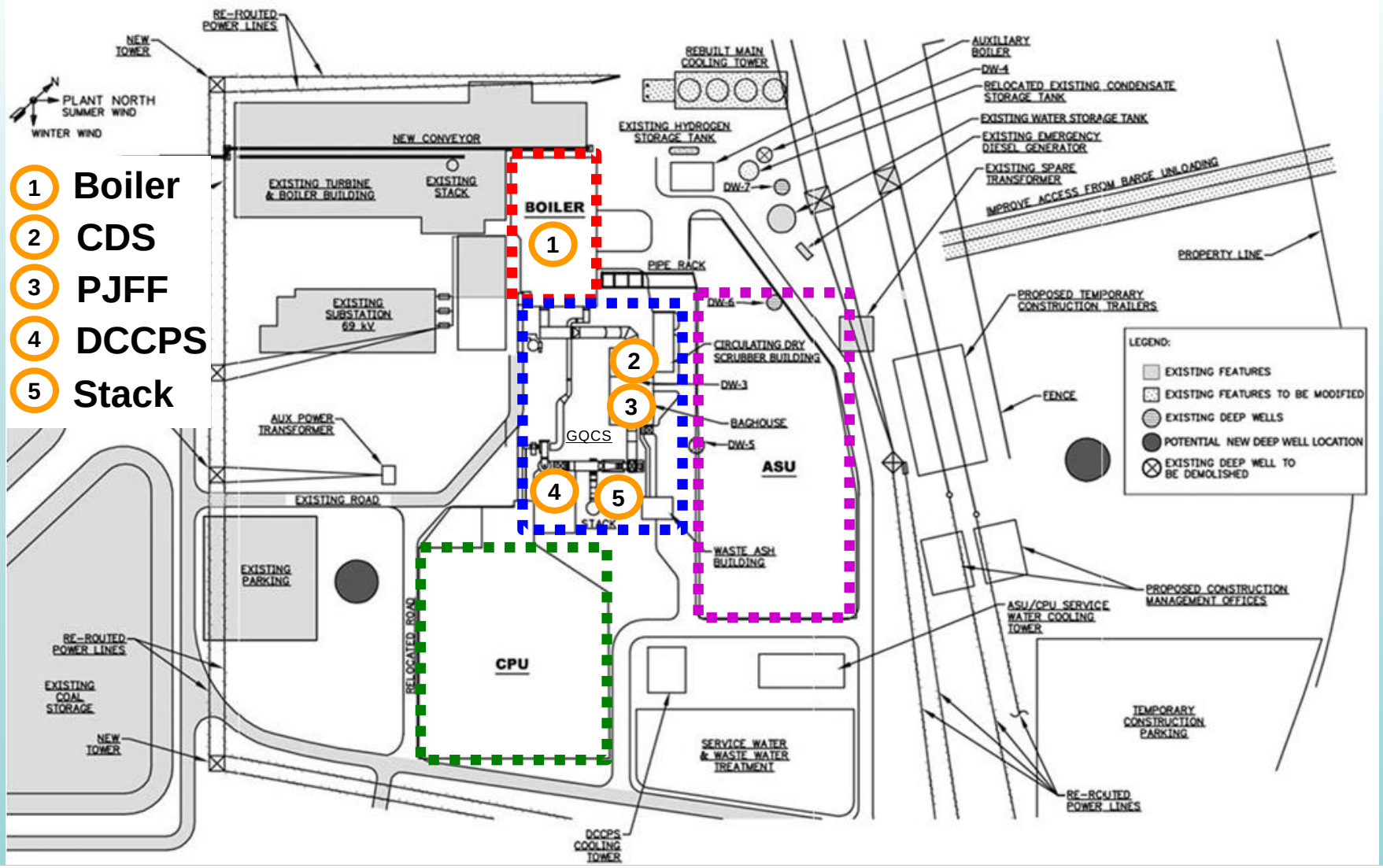

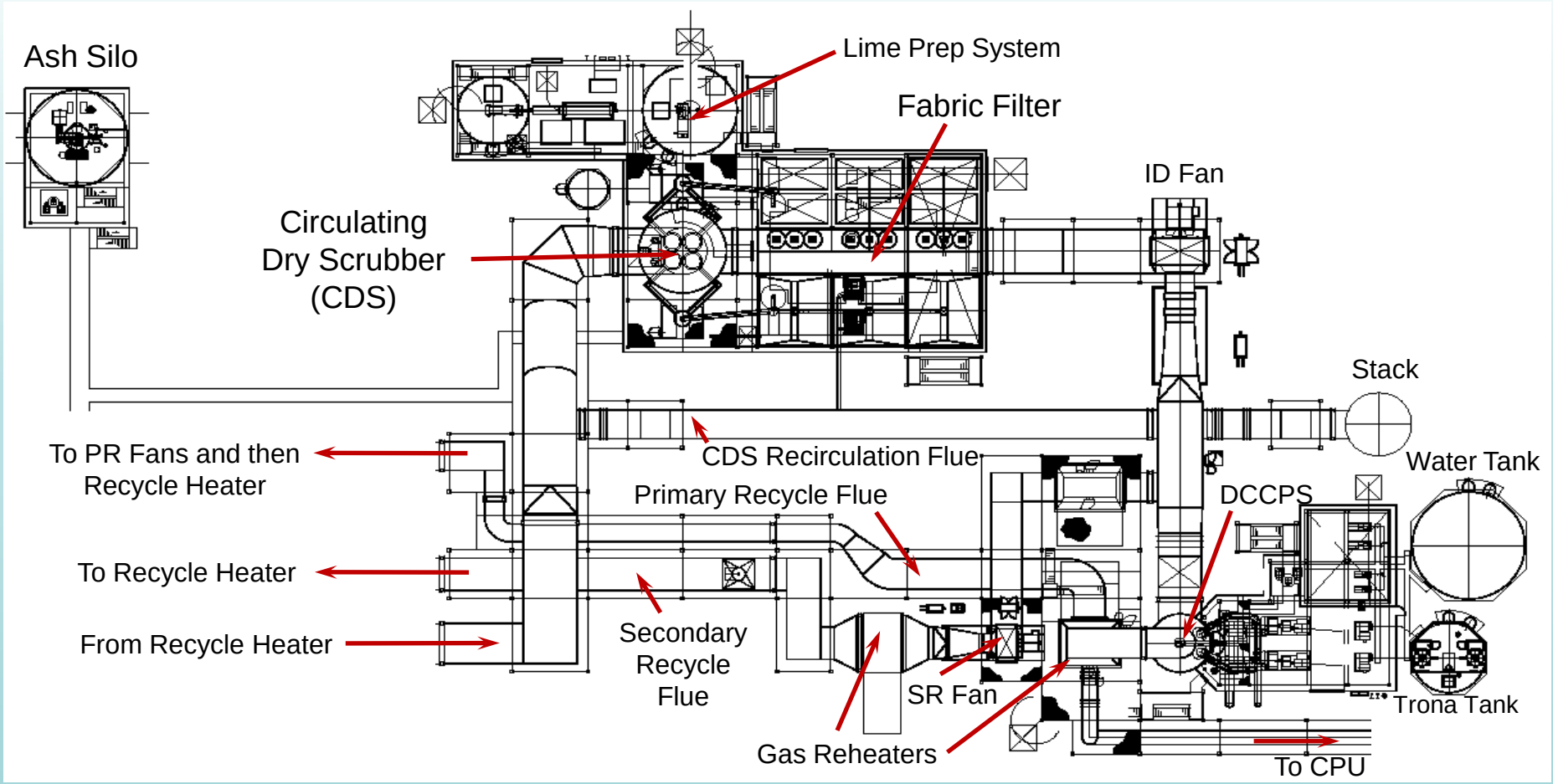

FutureGen 2.0 Current Performance

Oxy-PC Plant Predicted Thermal Performance	
Steam Turbine Generator Output (gross)	168,400 kW
Generator Step-Up Transformer Losses	674 kW
Steam Turbine Gross Generation to 138 kV Grid	167,726 kW
Plant Net Generation	**99,005 kW**
Boiler Heat Output	1,369.5 MBtu/hr
Boiler Fuel Efficiency (HHV)	87.25%
Fuel Heat Input (HHV)	1569.6 MBtu/hr
Coal Consumption	159,610 lb/hr
Plant Net Heat Rate, HHV	**15,854 Btu/kWh**
Net Plant Efficiency, HHV	**21.50%**

FutureGen 2.0 CO_2 Production

CO2 Recovery and Quality Predictions	
CO_2 Recovery (mass basis)	**98%**
Mass flow (CO_2)	319 klbs/hr, 3,828 tpd 1.08 million metric tons/year (based on 85% capacity factor)
Pressure	2,100 psig
Temperature	71 F
CO_2 content	**99.8%** (by mass, dry basis)
Inerts (Ar, N_2)	? 0.04% (by mass, dry basis)
Water (H_2O)	? 1 ppmw
Oxygen (O_2)	? 110 ppmw (dry basis)
Total Sulfur (SO_x)	? 1 ppmw (dry basis)
Hydrogen Sulfide (H_2S)	Negligible
Nitrous Oxides (NO_x)	? 1,600 ppmw (dry basis)
Mercury (Hg)	? 1 ppbw (dry basis)

FutureGen 2.0 Predicted Air Emissions

Predicted Air Emissions Full Load Oxy Firing Average Conditions	
Emissions Constituent	**lb/hr (lb/Mbtu), HHV Basis**
CO	4.8 (0.0031)
NO_x	33 (0.0206)
VOM	1.8 (0.0011)
PM (Total)	Negligible
SO_2	0.02 (0.000013)
Sulfuric Acid Mist	Negligible
HCl	Negligible
HF	Negligible
Hg	Negligible