1st Post Combustion Capture Conference

Results from test campaigns at the 1 t/h CO_2 post-combustion capture pilot-plant in Esbjerg under the EU FP7 CESAR project

Jacob Nygaard Knudsen[a], Jimmy Andersen[b], Jørgen Nørklit Jensen[a], Ole Biede[c]

[a]*DONG Energy Power A/S, A.C. Meyers vaenge 9, 2450 Copenhagen SV, Denmark*
[b]*DONG Energy Power A/S, Amerikavej 7, 6700 Esbjerg, Denmark*
[c]*Vattenfall A/S, Stoeberigade 14, 2450 Copenhagen SV, Denmark*

Keywords: Amine scrubbing; Pilot plant; Novel solvents; Process optimisation

1. Introduction

Post combustion capture is today regarded as one of the more mature CO_2 capture technologies with large-scale demonstration projects emerging around the globe. The standard post combustion capture process based on monoethanolamine (MEA) is a well known industrial process that has been in commercial use for decades. However the energy requirement of the standard MEA process remains relatively high and if applied in full-scale power generation it will lead to substantial efficiency penalties. Therefore a lot of effort has been spent in the CO_2 capture community for the last 10 years to develop alternative amine solvents and optimized flow sheets that are less energy intensive. Nevertheless not many of the alternative solvents or proposed process upgrades have ever been tested at larger scale in a realistic flue gas environment.

Since 2005, DONG Energy has operated a 1 ton/hr CO_2 capture pilot plant facility at its Esbjerg coal-fired power plant in Denmark. The pilot plant has played a vital role in the EU CASTOR project and among others demonstrated the viability of the standard MEA based capture process in the tail end of a coal-fired power plant. The present work is part of the ongoing EC sponsored FP7 research project CESAR (2008-2011). The overall aim of the CESAR project is to reduce the cost of post combustion capture trough process optimisations and development of more energy efficient solvents. In this work, the main findings from the test campaigns in Esbjerg are presented.

2. Results and discussion

As part of the CESAR project, DONG Energy has implemented a number of different process upgrades at the Esbjerg pilot plant. A simplified flow diagram of the Esbjerg pilot plant outlining the installed upgrades is shown below. Among others, the following 3 modifications have been installed: 1) improvement of the solvent cross flow heat exchanger, 2) Inter-stage cooling in the absorber, 3) Lean vapour recompression cycle.

To evaluate the impact of the different process upgrades on the energy consumption, a benchmark campaign of more than 1000 hours was conducted using 30% MEA. To investigate whether the energy consumption could be further reduced using advanced amine solvents, additional test campaigns were conducted with two novel solvents

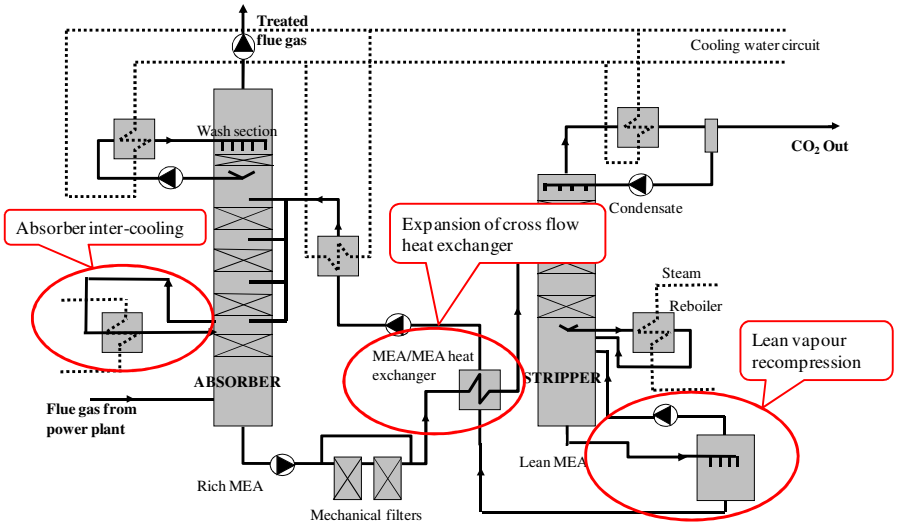

"CESAR 1" and "CESAR 2" developed within the CESAR project. Among others the results indicated that improving the cross flow heat exchanger decreased the temperature approach from 7-8 to 4-4.5ºC, however, the associated saving in regeneration energy was found to be relatively low (<3%). It was furthermore found that applying inter-stage cooling in the lower section of the absorber did not benefit the MEA process significantly, whereas with the CESAR 1 solvent the regeneration energy could be reduced with approximately 7%. Introducing a vapour recompression cycle on the lean solvent loop was found to lower the regeneration energy considerably (up to 20%) with MEA and CESAR 2 whereas it was less favourable with the CESAR 1 solvent. In all cases, the introduction of vapour recompression significantly increased the auxiliary power consumption.

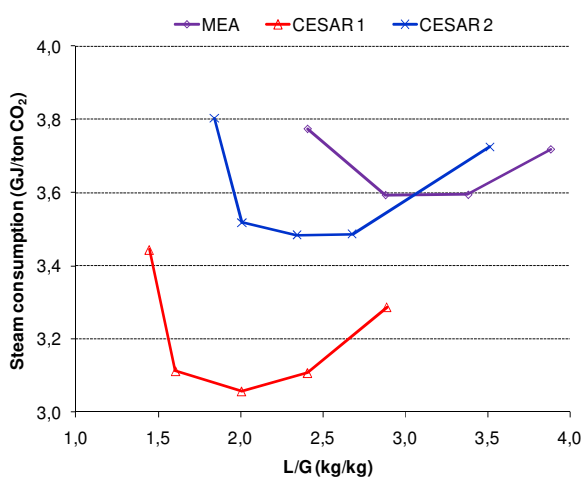

Significant improvement in the energy requirement could also be realised through introduction of novel solvents in the "standard process".

The figure to the right shows the regeneration energies of the different solvents as a function of liquid-to-gas ratio (L/G) for operation without inter-cooling and vapour recompression. It is seen that both the CESAR 1 and CESAR 2 solvents offer improvements over MEA. In particular CESAR 1 is seen to provide a substantial decrease in the regeneration energy requirement as well as the required solvent circulation rate i.e. lower L/G.

All in all, saving in the regeneration energy of close to 25% compared to that of the standard MEA process (3.7 GJ/ton CO_2) could be realised with the CESAR 1 solvent combined with absorber inter-cooling.

The degradation behaviour, amine losses and corrosion rates were also investigated during the test campaigns. Both CESAR 1 and CESAR 2 displayed lower degradation than MEA. CESAR 1 was found to be less corrosive than MEA whereas CESAR 2 proved to be highly corrosive, which makes commercial use of this solvent problematic.