Post-Combustion CO_2-capture

Potential CO_2 post-combustion capture systems

Challenges of future technology development

Alfons Kather

TUHH
Technische Universität Hamburg-Harburg
Institute of Energy Systems

11th Post Combustion Network Meeting
Panel Session
Vienna, 21st May 2008

PCC Technologies

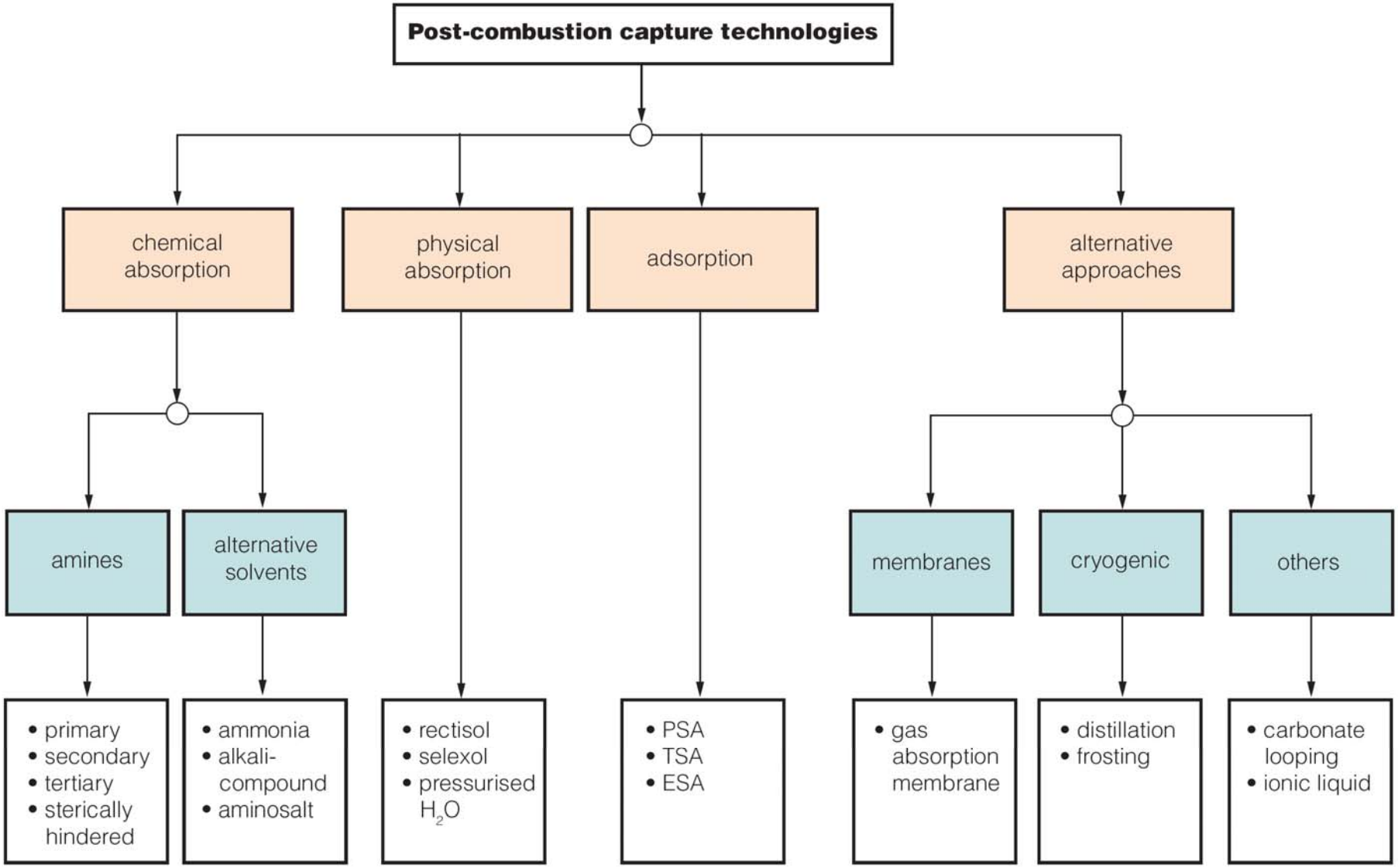

Competition for Deployment

- **PCC processes using wet chemical absorption compete for large scale deployment in the middle and long term with**
  - alternative PCC technologies, and
  - Oxyfuel & IGCC-CCS technologies.

Summary

	SPP-PCC	IGCC	SPP-PCC-CCS	Oxyfuel	IGCC-CCS
Availab./Reliability	+	-	+	●	-
short-term					
Efficiency	46%	46%	**34%→36%**	**37%**	**38%**
CO_2 emissions (gCO_2/kW.h)	717	717	97→92	89	87
Fuel consumption*	base	base	+35%→+28%	+24%	+21%
long-term					
Efficiency	50%	51%	**41%**	**42%**	**44%**
CO_2 emissions (gCO_2/kW.h)	660	647	80	79	75
Fuel consumption*	-8%	-10%	+12%	+10%	+5%

* relative to the reference plant (SPP-PCC with 46% efficiency)

Competition for Deployment

TUHH
Technische Universität Hamburg-Harburg

- **Of the three CCS technology paths, Post-Combustion CO_2-capture (PCC) using wet chemical absorption currently**
  - shows the largest efficiency decrease, and
  - has the potential of highest availability, reliability and flexibility.

►The integrated overall CO_2-capture process that shows the highest efficiency while offering acceptable levels of availability and reliability will prevail in this competition.

PCC Technologies

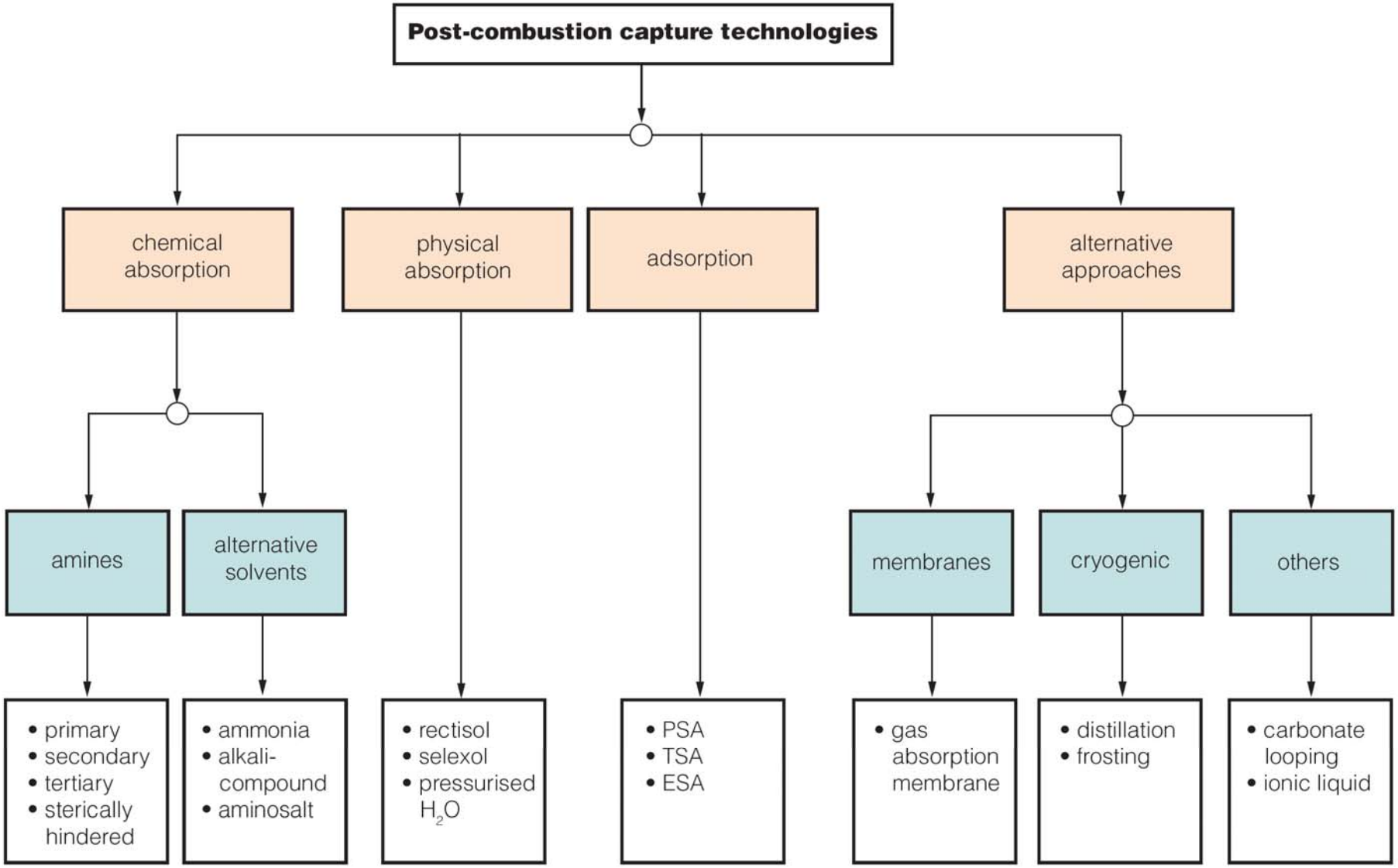

Oxyfuel vs. Oxycoal

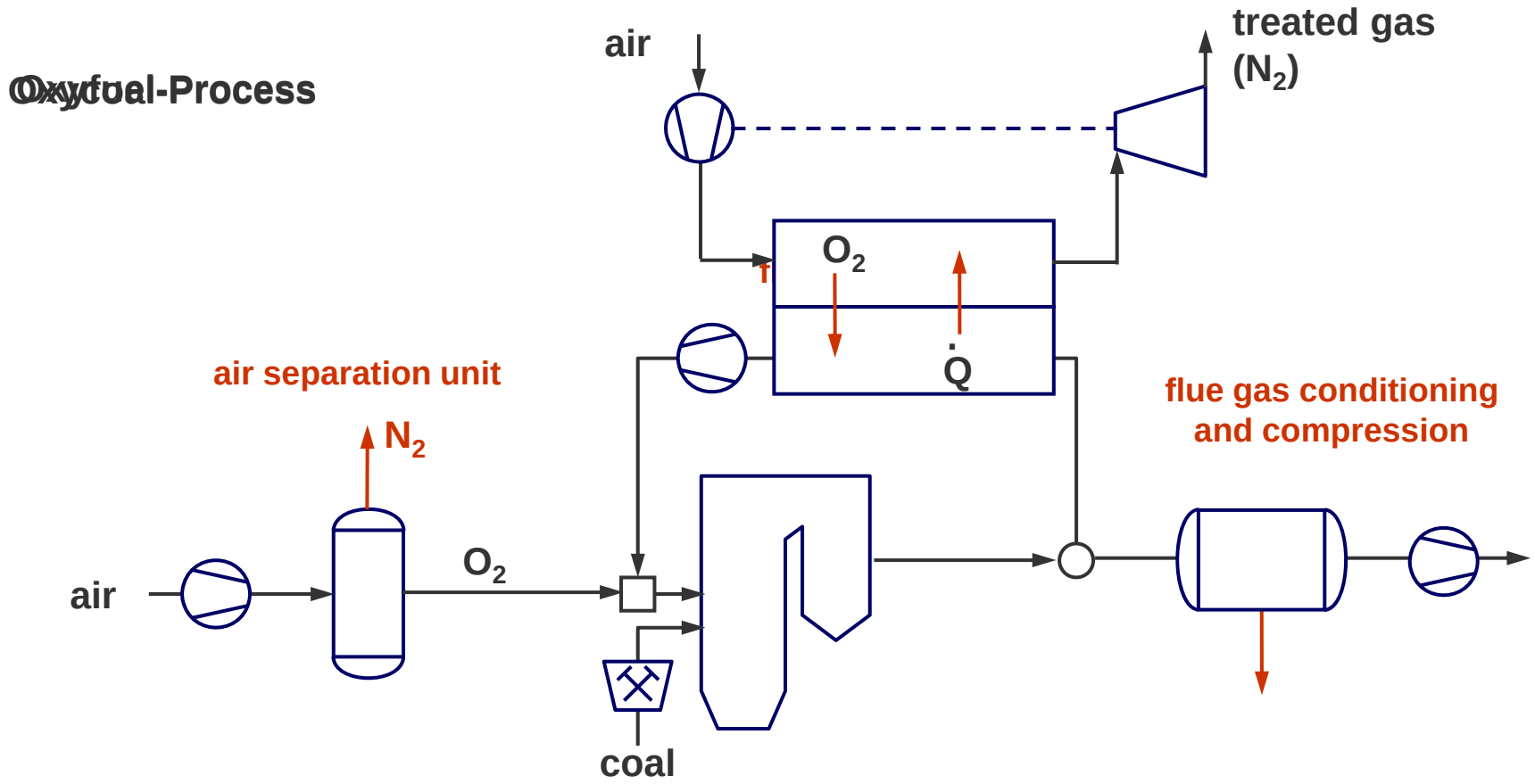

Comparison of efficiency and CO_2-emission

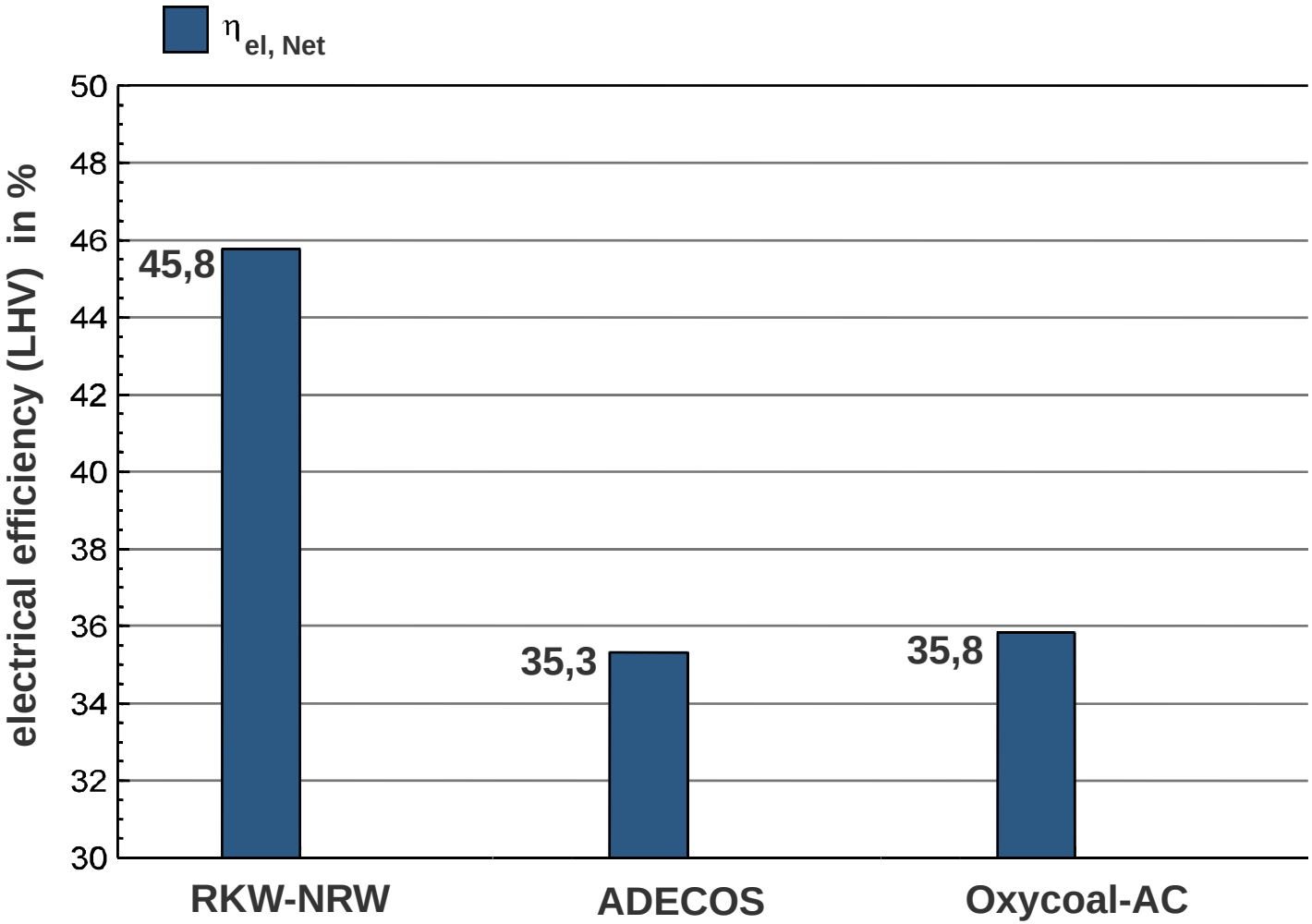

→ **Before doing detailed R&D the overall process has to be checked according to efficiency potential and reliability**

Conclusion

- **The need for high efficiency and high levels of reliability and availability demands the consideration of the integrated overall process.**

►Continuous and seamless communication among

- Chemists

- Chemical engineers

- Mechanical engineers

Thank you for your attention

Post-combustion capture (PCC) with chemical absorption

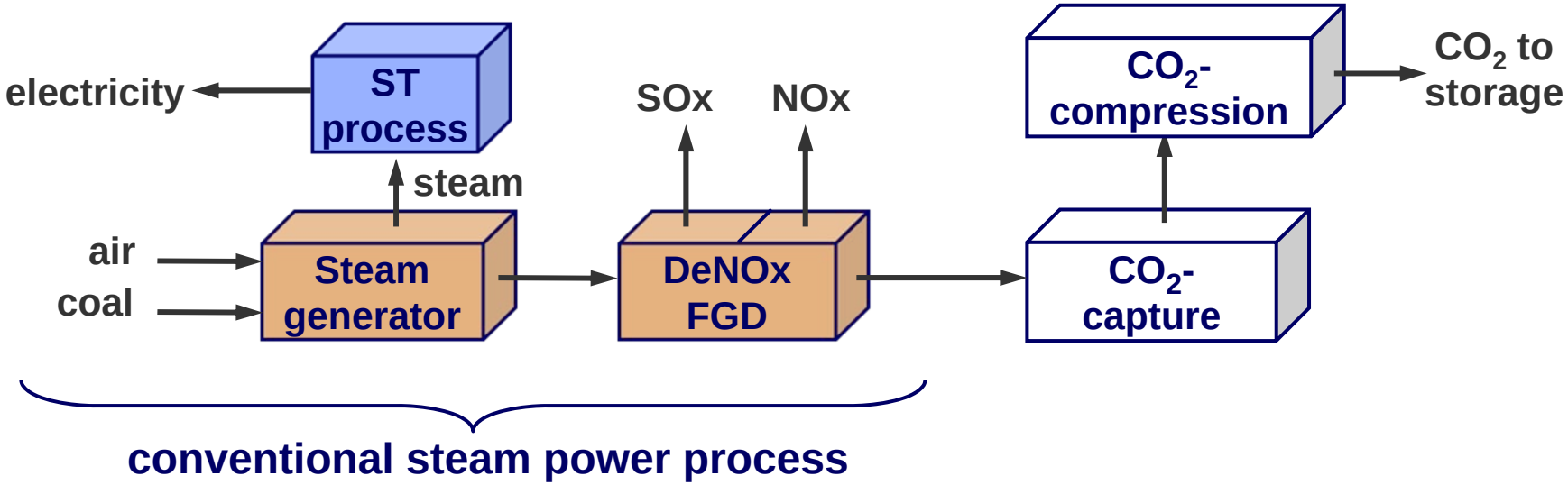

- + Commercial experience with chemical absorption from gas treating industry
- + Based upon proven steam power process ➔ <u>reliability and availability</u>
- + Small degree of integration, <u>high flexibility</u>
- − Highest efficiency decrease of the three CCS paths (~12%pts →10%)

Oxyfuel combustion

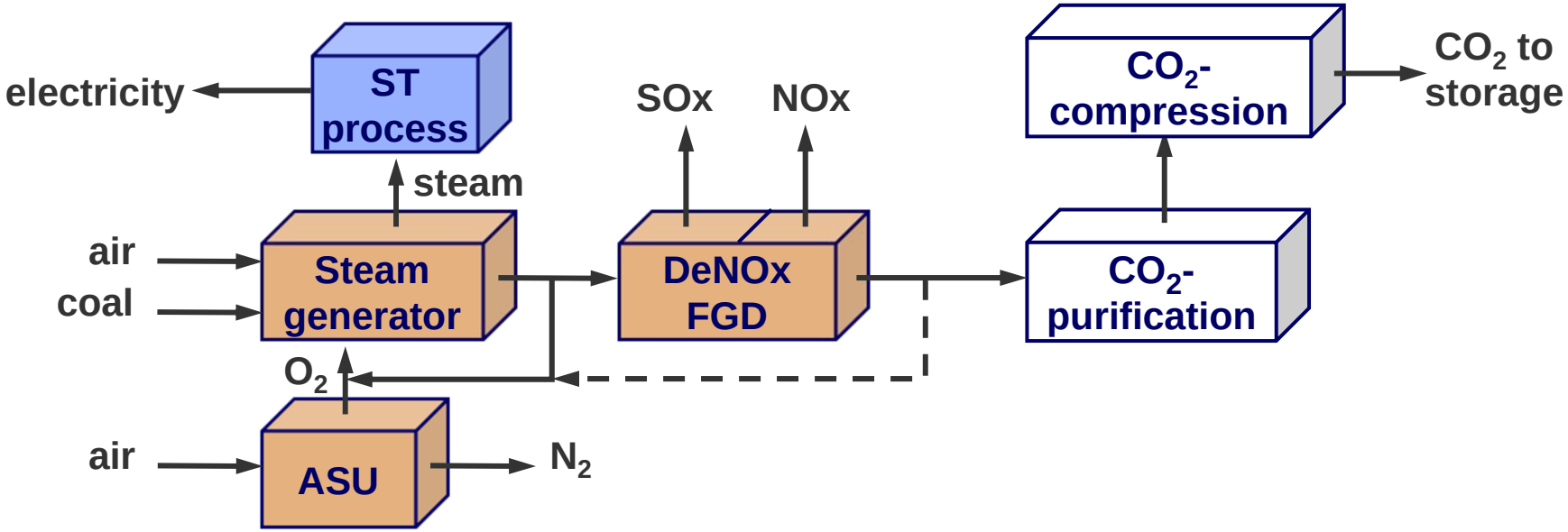

+ Possibly lower efficiency decrease than post-combustion capture (10.5%pts → 9%pts)

O Based on proven steam power process but with many changes in the firing system

− Impurities could present a knock-out criterion depending on transport and storage specifications → distillation ?

Pre-combustion capture (IGCC-CCS)

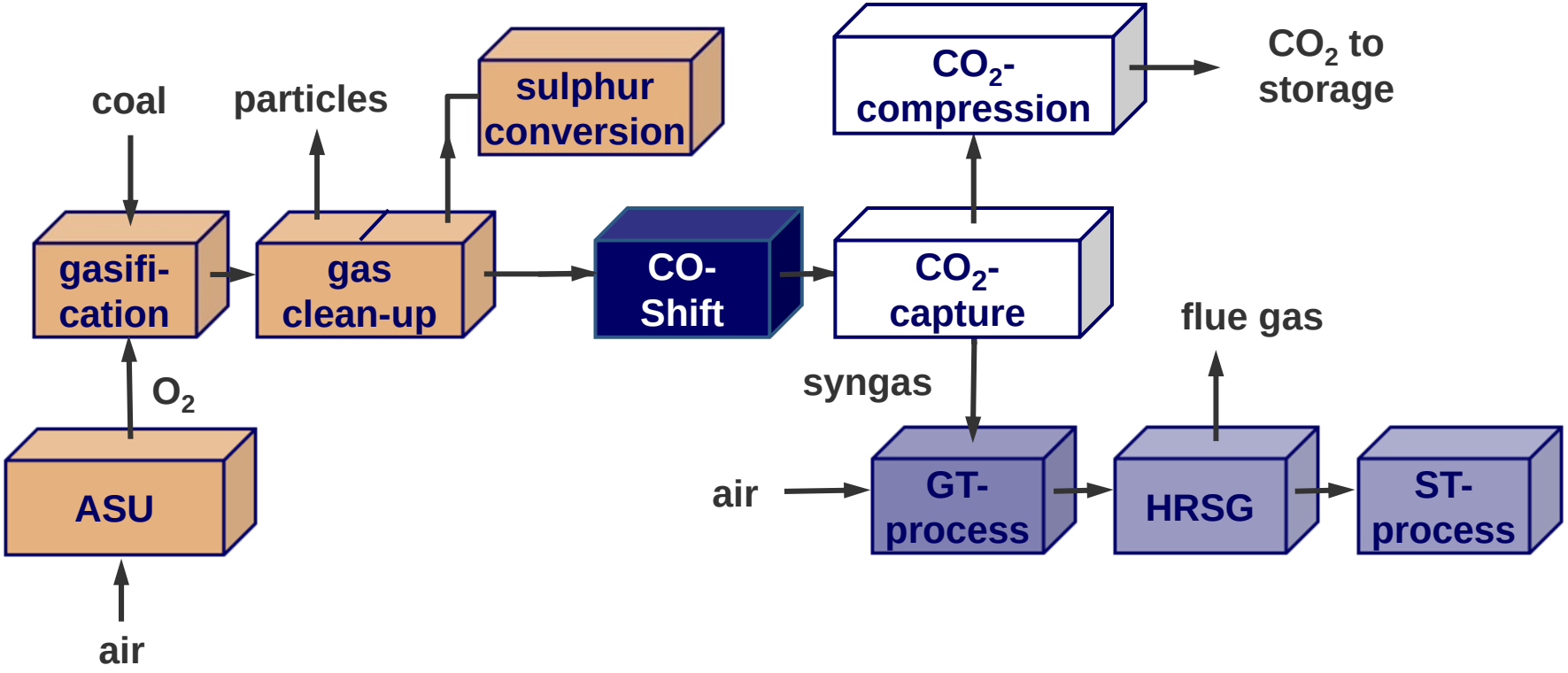

+ Potential for smallest efficiency decrease (~8%pts)

+ Flexibility with respect to fuel and products (polygeneration)

− Highly complex process configuration ➔ reliability?